TANK ACCESSORIES

PASSION TO PERFORM

MPFILTRI®

A WORLDWIDE LEADER IN THE FIELD OF HYDRAULIC FILTRATION EQUIPMENT.

Our company started life in 1964, when Bruno Pasotto decided to attempt to cater for the requests of a market still to be fully explored, with the study, design, development, production and marketing of a vast range of filters for hydraulic equipment, capable of satisfying the needs of manufacturers in all sectors. The quality of our products, our extreme competitiveness compared with major international producers and our constant activities of research, design and development has made us a worldwide leader in the field of hydraulic circuit filtering.
Present for over 50 years in the market, we have played a truly decisive role in defining our sector, and by now we are a group capable of controlling our entire chain of production, monitoring all manufacturing processes to guarantee superior quality standards and to provide concrete solutions for the rapidly evolving needs of customers and the market.

MARKET **LEADER**

Our work is based on a skillful interaction between advanced technology and fine workmanship, **customizing products according to specific market requests**, focusing strongly on innovation and quality, and following every step in the manufacturing of both standard and special products, fully respecting customer expectations.

Our customer-oriented philosophy, which enables us to satisfy all customer requests **rapidly** and **with personalized products**, makes us a **dynamic and flexible enterprise**. The possibility of constantly controlling and monitoring the entire production process is essential to allow us to guarantee the quality of our products.

WORLDWIDE PRESENCE

Our foreign Branches enable us to offer a diversified range of products that allow us to successfully face the aggressive challenge of international competition, and also to maintain a stable presence at a local level.

The Group boasts **8** **business branches**

TECHNOLOGY

Our constant **quest for excellence in quality and technological innovation** allows us to offer only the best solutions and services for applications in many fields, including general industry, test rigs, lubrication, heavy engineering, renewable energies, naval engineering, offshore engineering, aviation systems, emerging technologies and mobile plant (i.e. tractors, excavators, concrete pumps, platforms).

AND PRODUCTION

Our high level of technological expertise means **we can rely entirely on our own resources, without resorting to external providers.** This in turn enables us to satisfy a growing number of customer requests, also exploiting our constantly updated range of machines and equipment, featuring **fully-automated workstations** capable of **24-hour production**.

SUCTION FILTERS

Flow rates
up to 875 l/min

Mounting:
- Tank immersed
- In-Line
- In tank with shut off valve
- In tank with flooded suction

RETURN FILTERS

Flow rates
up to 3000 l/min

Pressure
up to 20 bar

Mounting:
- In-Line
- Tank top
- In single and duplex designs

RETURN / SUCTION FILTERS

Flow rates
up to 300 l/min

Pressure
up to 80 bar

Mounting:
- In-Line
- Tank top

SPIN-ON FILTERS

Flow rates
up to 365 l/min

Pressure
up to 35 bar

Mounting:
- In-Line
- Tank top

LOW & MEDIUM PRESSURE FILTERS

Flow rates
up to 3000 l/min

Pressure
up to 80 bar

Mounting:
- In-Line
- Parallel manifold version
- In single and duplex designs

HIGH PRESSURE FILTERS

Flow rates
up to 750 l/min

Pressure from 110 bar
up to 560 bar

Mounting:
- In-Line
- Manifold
- In single and duplex designs

PRODUCT RANGE

MP Filtri can offer a vast and articulated range of products for the global market, suitable for all industrial sectors using hydraulic equipment.

This includes filters (suction, return, return/suction, spin-on, pressure, stainless steel pressure) and structural components (motor/pump bell-housings, transmission couplings, damping rings, foot brackets, aluminium tanks, cleaning covers).

We can provide all the skills and solutions required by the modern hydraulics industry to monitor contamination levels and other fluid conditions.

Mobile filtration units and a full range of accessories allow us to supply everything necessary for a complete service in the hydraulic circuits.

STAINLESS STEEL HIGH PRESSURE FILTERS

Flow rates up to 125 l/min
Pressure from 320 bar
up to 1000 bar

Mounting:
- In-Line
- Manifold
- In single and duplex designs

CONTAMINATION MONITORING PRODUCTS

- Off-line, in-line particle counters
- Off-line bottle sampling products
- Fully calibrated using relevant ISO standards
- A wide range of variants to support fluid types and communication protocols

MOBILE FILTRATION UNITS

Flow rates from 15 l/min
up to 200 l/min

POWER TRANSMISSION PRODUCTS

- Aluminium bell-housings for motors from 0.12 kW to 400 kW
- Couplings in Aluminium Cast Iron - Steel
- Damping rings
- Foot bracket
- Aluminium tanks
- Cleaning covers

TANK ACCESSORIES

- Oil filler and air breather plugs
- Optical and electrical level gauges
- Pressure gauge valve selectors
- Pipe fixing brackets
- Pressure gauges

TANK ACCESSORIES

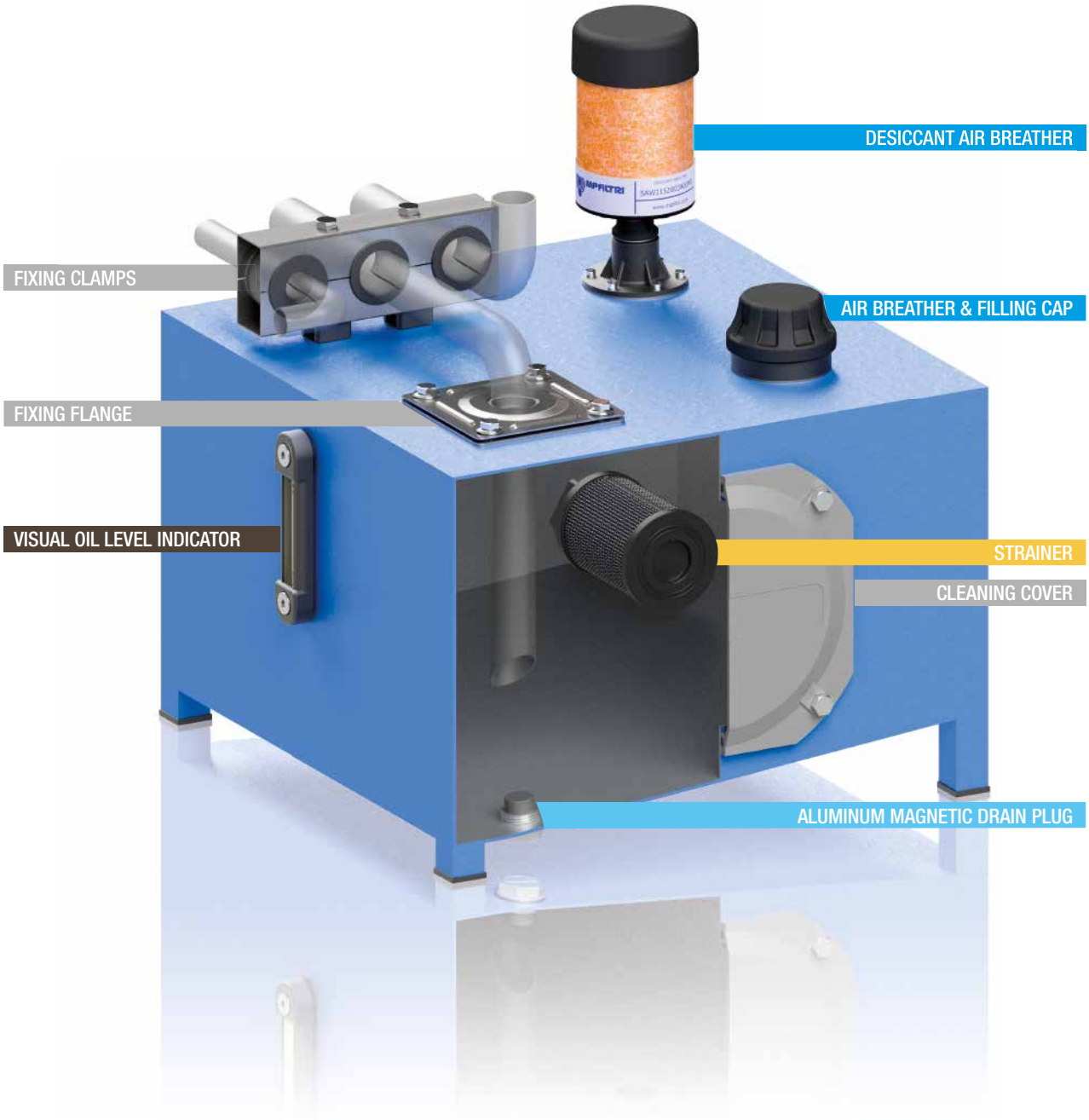

INDEX

1 page		INTRODUCTION
1	COMPANY	
6	PRODUCT RANGE	

10 page		STRAINERS
13	STR & MPA - MPM	Submerged suction filter, with bypass or magnetic column

20 page		AIR BREATHERS AND FILLER PLUGS
23	SAP 054-075 - SA	Air breathers
29	SAW 115	Desiccant air breathers
33	SCS	Metal air breathers with interchangeable filter element
39	SME 1 - SMF 1 - SML 1	Risers for breathers and filler caps installation
45	TA 46 - TAP 50 - SAP 50	Filling cap, air breather & filling cap
53	TA 80	Filling cap
57	TAP 90	Air breather & filling cap
63	TAP 114	Air breather & filling cap
67	TAP 115 & SAP 115	Filling cap, air breather & filling cap

72 page		FILLER AND DRAIN PLUGS
75	TC 50	Nylon filler plug
79	TKT - TSD	Nylon filler plugs
79	TKM	Aluminium magnetic drain plug

86 page		VISUAL OIL LEVEL INDICATORS
89	LCP - LCC	Spy eyes
95	LVA - LVU	Visual oil level indicator

100 page		ELECTRICAL OIL LEVEL INDICATORS
103	LEN - LEG - LET - LEM - LEU	Electrical oil level indicator
115	LVK	Electrical and visual oil level indicator

120 page		ACCESSORIES
123	EM1	Gauge isolator valves
129	SVM	Gauge isolator valves
133	FTA - FTR	Oil tank fixing flange
137	SFT	Fixing clamps
143	OB	Cleaning covers
149	SE10LT	Aluminium tanks

Strainers are used as safety filters to protect pumps from gross contamination which can cause them to grip.

Strainers

STR & MPA - MPM page 13

STR & MPA - MPM series

Flow rate up to 875 l/min

STR & MPA-MPM GENERAL INFORMATION

Description

Strainers

Flow rate up to 875 l/min

STR

STR is a range of suction strainers for protection of the downstream pump against the coarse contamination.
They are placed below the oil level directly connected to the suction line of the pump.

Available features:
- Female threaded connections up to 3", for a maximum flow rate of 875 l/min
- Bypass valve, to relieve excessive pressure drop across the filter media

Common application:
- Mobile machines (Construction and Agriculture machines)
- Industrial equipment

MPA - MPM

MPA and MPM are ranges of suction strainers for protection of the downstream pump against the coarse contamination.
They are placed below the minimum oil level, directly connected to the suction line of the pump.
The robust design allows the use of these filters in any heavy duty application.

Available features:
- Female threaded connections up to 3", for a maximum flow rate of 875 l/min
- Magnetic column (MPM), to hold the ferrous particles

Common application:
Industrial equipment

Technical data

STR materials
1 - Connection: Polyamide, GF reinforced
2 - Core tube: Tinned steel
3 - Wire mesh
4 - End cap: Polyamide, GF reinforced
5 - Bypass valve: Polyamide, GF reinforced - Steel

MPA - MPM materials
1 - Connection: Aluminium
2 - Magnetic column
3 - Tie rod: Galvanized steel
4 - End cap: Galvanized steel
5 - Core tube: Galvanized steel
6 - Filter media: Wire mesh
7 - Bottom: Galvanized steel
8 - Washer: Galvanized steel
9 - Self-locking nut: Galvanized steel - Nylon

Bypass valve
Opening pressure 30 kPa (0.3 bar)

Elements
Fluid flow through the filter element from OUT to IN.

Temperature
From -25 °C to +110 °C

Weights [kg]

Filter series	
STR	see page 17
MPA - MPM	see page 19

STR
Without bypass

STR
With bypass

MPA
Without magnetic column

MPM
With magnetic column

Pressure drop

Filters pressure drop Δp
in function of connection type

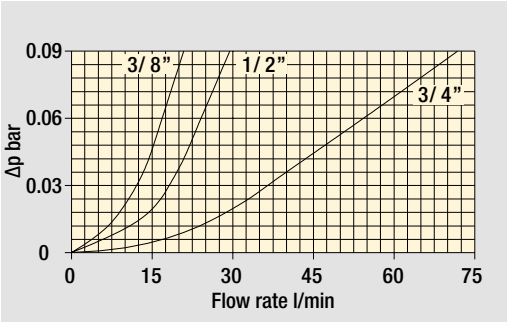

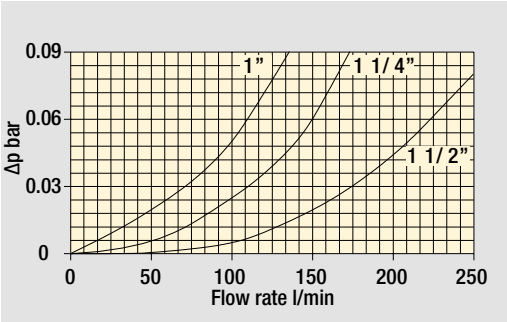

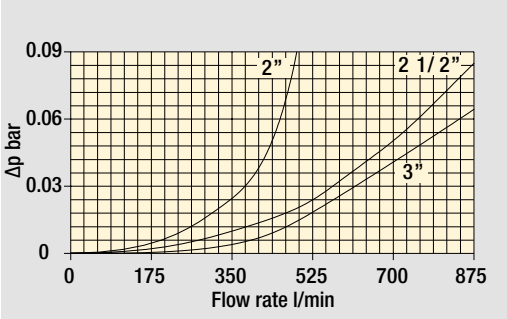

The curves are plotted using mineral oil with density of 0.86 kg/dm³ in compliance with ISO 3968.
Δp varies proportionally with density.

Flow rates [l/min]

Filter series	Thread	l/min
STR & MPA - MPM	3/8”	19
	1/2”	28
	3/4”	67
	1”	126
	1 1/4”	167
	1 1/2”	258
	2”	480
	2 1/2”	854
	2”	480
	3”	995

Hydraulic symbols

Filter series	Style S	Style B
STR	•	•
MPA - MPM	•	

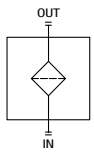

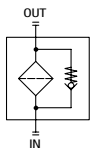

Maximum flow rate for a complete suction filter with a pressure drop Δp = 0.08 bar.
The reference fluid has a kinematic viscosity of 30 mm²/s (cSt) and a density of 0.86 kg/dm³.
For different pressure drop or fluid viscosity we recommend to use our selection software available on www.mpfiltri.com.
Please, contact our Sales Department for further additional information.

STR

Designation & Ordering code

COMPLETE FILTER

Configuration example 1:	STR045	1	B	G1	M60	P01
Configuration example 2:	STR100	4	S	G2	M250	P01

Element series and size

STR045
STR050
STR065
STR070
STR086
STR100
STR140
STR150

Connection type

	STR045	STR050	STR065	STR070	STR086	STR100	STR140	STR150
1	3/8”	3/8”	1/2”	1/2”	1 1/2”	1 1/4”	1 1/2”	2”
2	1/2”	1/2”	3/4”	3/4”	2”	1 1/4”	2”	2 1/2”
3	-	-	3/4”	3/4”	1 1/2”	1 1/2”	2”	3”
4	-	-	1”	1”	2”	2”	2 1/2”	-
5	-	-	-	-	1 1/2”	1 1/2”	3”	-
6	-	-	-	1/2”	2”	-	3”	-

Valves

S	Without bypass
B	With bypass 0.3 bar

Thread type

G1	Thread GAS
G2	Thread NPT

Filtration rating (filter media)

M25	Wire mesh	25 µm
M60	Wire mesh	60 µm
M90	Wire mesh	90 µm
M250	Wire mesh	250 µm

Execution

P01	MP Filtri standard
Pxx	Customized

OTHER INFORMATION

Conditions of packaging

Filter size	Pcs. per box
045	12
050	12
065	6
070	6
086	6
100	6
140	1
150	1

Dimensions

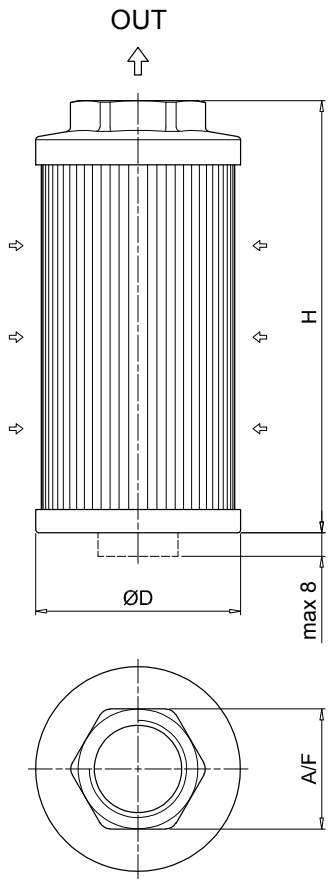

STR						
Filter size	Connection type	Thread	Ø D [mm]	H [mm]	A / F [mm]	Weight [kg]
045	1	3/8”	46	105	30	0.15
	2	1/2”	46	105	30	0.19
050	1	3/8”	52	79	30	0.11
	2	1/2”	52	79	30	0.11
065	1	1/2”	65	110	41	0.19
	2	3/4”	65	110	41	0.22
	3	3/4”	65	144	41	0.24
	4	1”	65	144	41	0.22
070	1	1/2”	70	95	41	0.18
	2	3/4”	70	95	41	0.17
	3	3/4”	70	141	41	0.23
	4	1”	70	141	41	0.22
	6	1/2”	70	141	41	0.24
086	1	1 1/2”	86	143	69	0.33
	2	2”	86	143	69	0.30
	3	1 1/2”	86	201	69	0.43
	4	2”	86	201	69	0.40
	5	1 1/2”	86	261	69	0.53
	6	2”	86	261	69	0.50
100	1	1 1/4”	99	137	69	0.47
	2	1 1/4”	99	227	69	0.58
	3	1 1/2”	99	227	69	0.55
	4	2”	99	227	69	0.51
	5	1 1/2”	99	137	69	0.43
140	1	1 1/2”	130	160	69	0.70
	2	2”	130	160	69	0.68
	3	2”	130	262	69	0.94
	4	2 1/2”	130	272	101	1.10
	5	3”	130	272	101	1.00
	6	3”	130	330	101	1.17
150	1	2”	150	150	70	0.34
	2	2 1/2”	150	212	90	0.37
	3	3”	150	272	100	0.40

MPA-MPM

Designation & Ordering code

COMPLETE FILTER

Configuration example 1:	MPA	030	G1	M60	P01
Configuration example 2:	MPM	430	G2	M250	P01

Element series

MPA	Without magnetic column
MPM	With magnetic column

Connections

012	3/8”
015	1/2”
025	1/2”
030	3/4”
045	3/4”
050	1”
075	1”
095	1 1/4”
120	1 1/4”
150	1 1/2”
180	1 1/2”
220	2”
280	2”
300	2 1/2”
380	2”
430	3”

Thread type

G1	Thread GAS
G2	Thread NPT

Filtration rating (filter media)

M25	Wire mesh	25 µm
M60	Wire mesh	60 µm
M90	Wire mesh	90 µm
M250	Wire mesh	250 µm

Execution

P01	MP Filtri standard
Pxx	Customized

OTHER INFORMATION

Conditions of packaging

Size	Pcs. per box
012	12
015	6
025	6
030	6
045	6
050	6
075	6
095	6
120	6
150	6
180	1
220	1
280	1
300	1
380	1
430	1

Dimensions

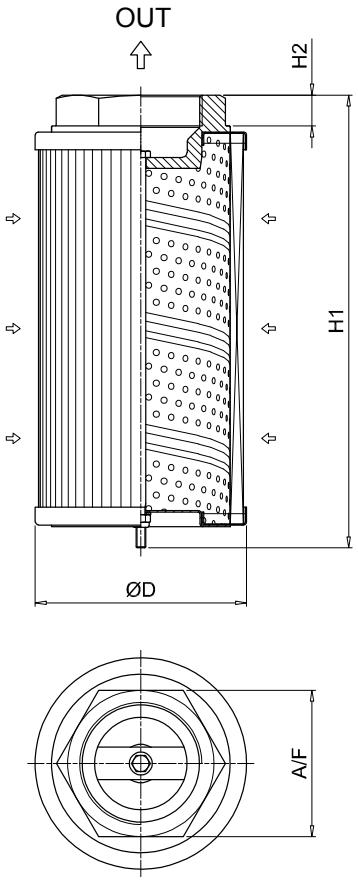

MPA

Filter size	Thread	ØD [mm]	H1 [mm]	H2 [mm]	A/F [mm]	Weight [kg]
012	3/8”	50	98	16	28	0.17
015	1/2”	50	98	16	28	0.17
025	1/2”	70	113	16	28	0.27
030	3/4”	70	115	18	42	0.36
045	3/4”	70	160	18	42	0.39
050	1”	70	160	18	42	0.35
075	1”	99	145	18	42	0.54
095	1 1/4”	99	148	20	60	0.63
120	1 1/4”	99	239	20	60	0.95
150	1 1/2”	99	239	20	60	0.91
180	1 1/2”	130	174	20	60	0.98
220	2”	130	162	13	80	1.00
280	2”	130	272	13	80	1.60
300	2 1/2”	130	281	20	90	1.67
380	2”	130	322	13	80	1.60
430	3”	130	335	22	106	1.93

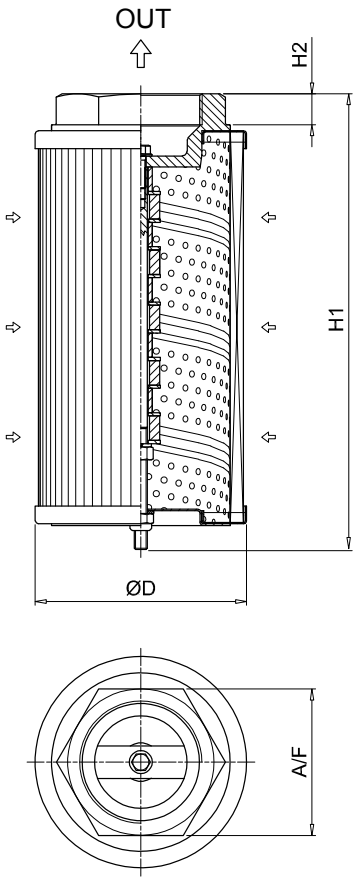

MPM

Filter size	Thread	ØD [mm]	H1 [mm]	H2 [mm]	A/F [mm]	Weight [kg]
012	3/8”	50	98	16	28	0.17
015	1/2”	50	98	16	28	0.17
025	1/2”	70	113	16	28	0.27
030	3/4”	70	115	18	42	0.36
045	3/4”	70	160	18	42	0.39
050	1”	70	160	18	42	0.35
075	1”	99	148	18	42	0.54
095	1 1/4”	99	154	20	60	0.63
120	1 1/4”	99	244	20	60	0.95
150	1 1/2”	99	244	20	60	0.91
180	1 1/2”	130	174	20	60	0.98
220	2”	130	163	13	80	1.00
280	2”	130	273	13	80	1.60
300	2 1/2”	130	282	20	90	1.67
380	2”	130	323	13	80	1.60
430	3”	130	336	22	106	1.93

The complete series of air breathers and filler plugs makes it possible to meet all market demands.
Metal and plastic versions suitable for use on mobile equipment are available.
Filler plugs perform a dual function, air filtration at the tank inlet and prefiltration of the fluid by means of the basket, in order to prevent the ingress of foreign material into the tank during filling and top-up operations.
Correct operation of breather filters makes for longer life of the filter cartridges installed in the hydraulic circuit, and in applications where high level of contamination are present.
Desiccant breathers are also available to absorb free water and moisture contained in the air entering into the tank.

Air Breathers & Filler Plugs

SAP 054-075 - SA	page 23
SAW 115	29
SCS	33
SME 1 - SMF 1 - SML 1	39
TA 46 - TAP 50 - SAP 50	45
TA 80	53
TAP 90	57
TAP 114	63
TAP 115 & SAP 115	67

SAP 054-075 series

Nylon air breather filter

SA series

Metal air breather filter

SAP 054-075 GENERAL INFORMATION

Technical data

Air breathers & Filler plugs

Nylon air breather filter
Flow rate up to 400 l/min

SAP is a range of plastic air breathers for protection of the tank against the solid contamination contained into the air.
They are usually directly fitted on the tank.

Available features:
- Male threaded connections up to 3/4", for a maximum flow rate of 400 l/min
- Replaceable filter element
- Fine cellulose filtration, to get a good cleanliness level into the reservoir
- Polyester media is an option for heavy environmental conditions (high humidity, sand …)

Common applications:
- Mobile machines (construction and agriculture machines)
- Industrial equipment

Flow rate Δp 0.02 bar

	Flow rate [l/min]	
Filtration rating	L03	L10
SAP054	200	250
SAP075	350	400

Materials
- Cover: Nylon
- Connection: Nylon
- Filter element: Resin impregnated paper

Temperature
From -25 °C to +100 °C

Weight
SAP 054 - 0.06 kg
SAP 075 - 0.15 kg

Designation & Ordering code

COMPLETE AIR BREATHER

Configuration example : SAP054 | G2 | L10 | A | P01

Series and size

SAP054	
SAP075	

Connections to the tank

	SAP054	SAP075
G1	G 3/8"	G 1/2"
G2	G 1/2"	G 3/4"

Filtration rating

L03	Resin impregnated paper	3 µm
L10	Resin impregnated paper	10 µm

Seals

A	NBR

Execution

P01	MP Filtri standard
Pxx	Customized

FILTER ELEMENT

Configuration example : A4 | L10 | P01

Filter element series and size

A4	SAP054
A7	SAP075

Filtration rating

L03	Resin impregnated paper	3 µm
L10	Resin impregnated paper	10 µm

Execution

P01	MP Filtri standard
Pxx	Customized

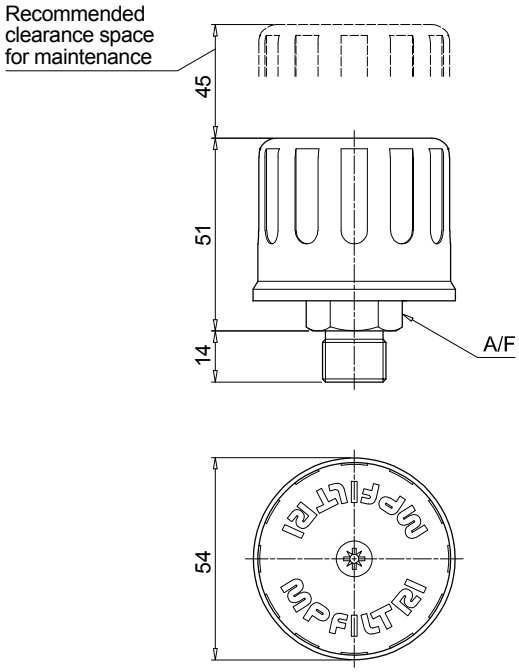

SAP054

Connection	A/F [mm]
G1	22
G2	27

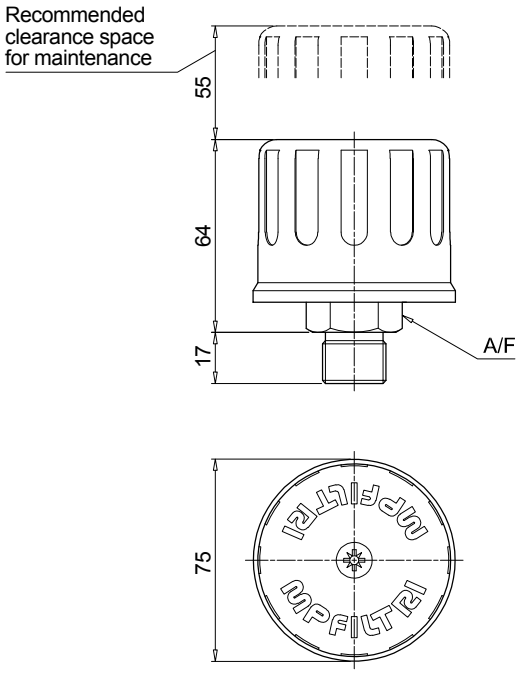

SAP075

Connection	A/F [mm]
G1	27
G2	32

SA GENERAL INFORMATION

Technical data

Air breathers & Filler plugs

Metal air breather filter
Flow rate up to 2500 l/min

SA is a range of metal air breathers for protection of the tank against the solid contamination contained into the air.
They are usually directly fitted on the tank. The robust design allows the use of these filters in any heavy-duty application.

Available features:
- Male threaded connections up to 2 1/2", for a maximum flow rate of 2500 l/min
- Replaceable filter element
- Fine cellulose filtration, to get a good cleanliness level into the reservoir
- Polyester media is an option for heavy environmental conditions (high humidity, sand …)

Common applications:
- Mobile machines (construction and agriculture machines)
- Industrial equipment

Flow rate Δp 0.02 bar

	Flow rate [l/min]	
	Filtration rating L03	L10
SA036	140	140
SA053	250	250
SA075	350	400
SA115	800	850
SA145	1800	1850
SA185	2300	2500

Materials
- Cover: Steel
- Connection: Anodized steel, Galvanized steel
- Filter element: Resin impregnated paper
- Screws: Galvanized steel
- Washer: Teflon
- Ring: Galvanized steel
- Seals: NBR

Temperature
From -25 °C to +100 °C

Weight
SA 036 - 0.08 kg
SA 053 - 0.15 kg
SA 075 - 0.26 kg
SA 115 - 0.40 kg
SA 145 - 0.59 kg
SA 185 - 1.22 kg

Designation & Ordering code

COMPLETE AIR BREATHER

Configuration example : SA115 | G1 | L10 | A | P01

Series and size

SA036	SA053	SA075	SA115	SA145	SA185

Connections to the tank

	SA036	SA053	SA075	SA115	SA145	SA185
G1	G 1/4"	G 1/4"	G 1/2"	G 1"	G 1 1/2"	G 2 1/2"
G2	G 3/8"	G 3/8"	G 3/4"	-	-	-
G3	G 1/2"	-	-	-	-	-
G4	1/4" NPT	1/4" NPT	1/2" NPT	1" NPT	1 1/2" NPT	2 1/2" NPT
G5	3/8" NPT	3/8" NPT	3/4" NPT	-	-	-
G6	1/2" NPT	-	-	-	-	-

Filtration rating

L03	Resin impregnated paper	3 µm
L10	Resin impregnated paper	10 µm
S	Without filter element	

Seals

A	NBR

Execution

P01	MP Filtri standard
Pxx	Customized

FILTER ELEMENT

Configuration example : A8 | L10 | P01

Filter element series and size

A05	A5	A7	A8	A10	A11

Filtration rating (filter media)

L03	Resin impregnated paper	3 µm
L10	Resin impregnated paper	10 µm

Execution

P01	MP Filtri standard
Pxx	Customized

SA

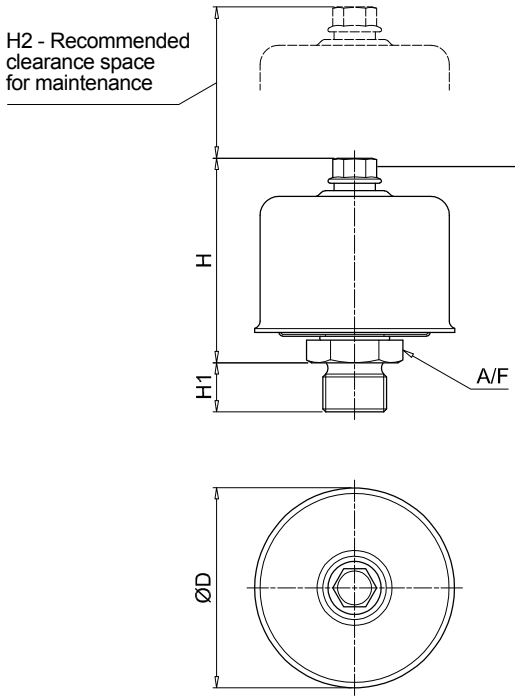

Tipe of bolt/nut

Phillips:
SA036

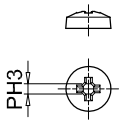

Hex:
SA053
SA075
SA115
SA145

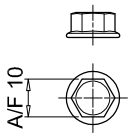

Wings:
SA185

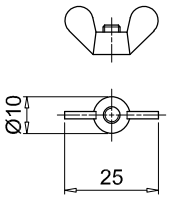

Type	Connection	ØD [mm]	H [mm]	H1 [mm]	H2 [mm]	A/F [mm]
036	G1 ÷ G6	36	37	13	30	22
053	G1-G2-G4-G5	53	53	13	50	22
075	G1	75	69	13	60	27
	G2			17		32
	G4			15		27
	G5			20		32
115	G1 - G4	115	80	17	70	38
145	G1 - G4	145	115	25	100	55
185	G1 - G4	185	164	25	150	90

SAW 115 series

Moisture control desiccant air breather

SAW 115 GENERAL INFORMATION

Technical data

Air breathers & Filler plugs

Moisture control desiccant air breather
Max air flow up to 453 l/min

SAW is a range of desiccant breathers; they are products that combine the filtration of the solid contamination and the absorption of the free water contained into the air.
They are usually directly fitted on the tank; the filter layers remove the solid contamination while the desiccant agent holds the moisture contained in the air that enters into the tank as result of the tank breathing.
While in service or during shut-down, the desiccant agent dries the equipment, absorbing moisture from the reservoir.

Available features:
- Male threaded connections up to 1", for a maximum flow rate of 453 l/min
- Fine filtration rating, to get a good cleanliness level into the reservoir

Common applications:
Hydraulic systems, oil storage, tanks, transformers, renewable energy, Gearboxes.

Chemical Compatibility

Recommended:
- All Gear Oil
- Most Hydraulic Fluid
- Mineral and Synthetic Oil

Not Recommended:
- Phosphate Ester
- Hydrogen Sulphide
- Sulphuric Acid
- High Alkaline Cleaner

Flow rate Δp 0.02 bar

	Flow rate [l/min]
Filtration rating	03
SAW115	453

Materials
Connection: Nylon
Internal Support Pipe: Nylon
Screen: Polycarbonate
Cover: Nylon
Dryer Agent: Silica Gel

Filter Efficiency 3µm absolute (B_3 ≥200)

Seals NBR

Temperature From -25 °C to +90 °C

Humidity Level Below Ambient Conditions
SAW1153G03A00P01: protects 30,000+ cycles
Deliquescent: Protects 5,000 cycles
(Testing parameters 23 °C, 30 l/min)

Silica Gel Weight
Lenght 1: 0.32 kg
Lenght 2: 0.56 kg
Lenght 3: 0.84 kg

Total Weight
Lenght 1: 0.60 kg
Lenght 2: 0.90 kg
Lenght 3: 1.20 kg

Designation & Ordering code

MOISTURE CONTROL DESICCANT BREATHER

Configuration example: SAW115 | 1 | G | 03 | A | 0 | 0 | P01

Series and size
SAW115

Length
1 | **2** | **3**

Connections to the tank
G Thread 1"

Filtration rating
03 Orange Silica Gel

Seals
A NBR

Valve
0 Without valve

Option
0 Standard

Execution
P01 MP Filtri standard
Pxx Customized

ACCESSORIES

Configuration example: SMG1 | S | A | P02

Series and size
SMG Adapter Flange

Connections to the tank
S Without screws

Seals
A NBR

Execution
P02 MP Filtri standard

Dimensions

How does SAW Series works

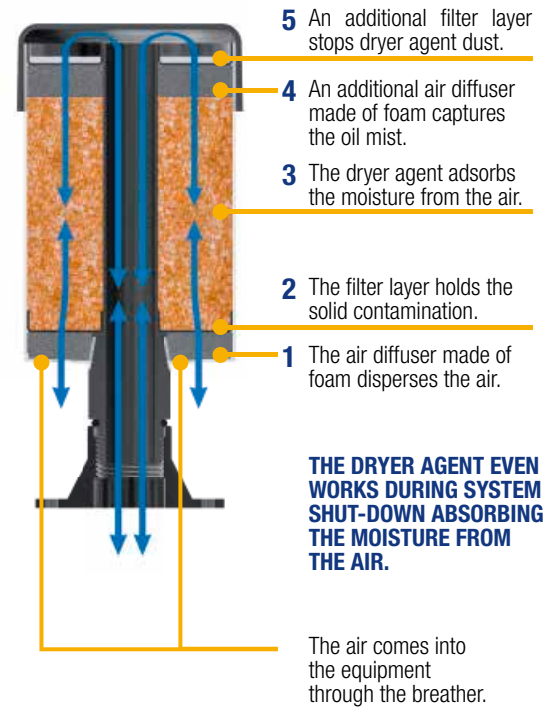

SAW115	
Length	**H [mm]**
1	154
2	205
3	256

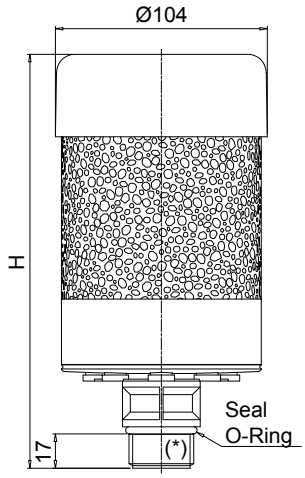

Optional 6-hole tank flange SMG1 type

1" Multi-fit (NPT, BSPT, NPSM)

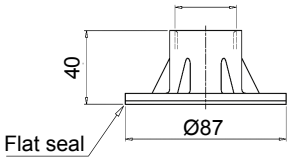

Holes on the tank

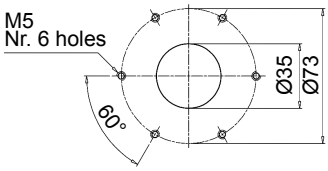

(*) 1" Multi-fit (NPT, BSPT, NPSM)

Silica gel

Active breather

Depleted breather

Silica gel is the most efficient and economic moisture adsorbent for general applications.

A white breather means the unit has done its job keeping moisture out of your lubricants.

Whenever the colour changes from orange to white it's time to replace the breather with a new one.

All breathers should be changed at least once a year.

IMPORTANT
Dispose of the exhausted silica gel according to the regulations in force in the country of use.

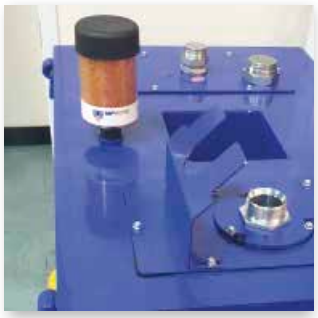

Air vent holes

Max hydraulic flow rate [l/min (cfm)]	Holes to open
up to 110 (4)	2
from 111 to 220 (4-8)	4
from 221 to 330 (8-12)	6
from 331 to 452 (12-16)	8

IMPORTANT INSTALLATION INFORMATION

- The air vent holes are plugged for any new breather
- The plugs protect the dryer agent during storage and shipment
- The plugs must be taken out during the installation, according to the max hydraulic flow rate

SCS series

Metal air breather filter

Technical data

Air breathers & Filler plugs

Metal air breather filter
Flow rate up to 1330 l/min

SCS is a range of air breathers for protection of the tank against the solid contamination contained into the air.
They are composed of a spin-on filter can screwed on a connection tube, directly fitted on the tank. They are usually directly fitted on the tank.

Available features:
- Weld or flanged connection, for a maximum flow rate of 1415 l/min
- Fine cellulose and microfibre filtration, to get a good cleanliness level into the reservoir

Common applications:
- Mobile machines (construction and agriculture machines)
- Industrial equipment

Flow rate Δp 0.02 bar

	Flow rate [l/min]		
Filtration rating	P10	A03	A10
SCS050	550	515	530
SCS070	550	515	530
SCS100	1415	1300	1330
SCS150	1415	1300	1330

Materials
Riser: Galvanized steel

Temperature
From -25 °C to +100 °C

Weight
SCS050...G1: 0,200 kg
SCS050...G2: 0,265 kg
SCS100...G1: 0,450 kg
SCS100...G2: 0,645 kg

CS/CG050: 0,73 kg
CS/CG070: 0,95 kg
CS100: 1,3 kg
CS150: 1,6 kg
CG100: 1,3 kg
CG150: 1,6 kg

Designation & Ordering code

METAL AIR BREATHER FILTER

Configuration example 1 : SCS050 | C | G2 | | V | P01
Configuration example 2 : SCS150 | C | G2 | A10 | V | P01

Series and size
SCS050 | **SCS070** | **SCS100** | **SCS150**

Connections to the tank

C	Weld riser
F	Screwed flange

Threaded connection		SCS050 - 070	SCS100 - 150
G1	Connection ISO 228	G 3/4”	G 1 1/4”
G2	Connection U.S. standard	1” - 12 UNF	1 1/2” - 16 UN

Filtration rating		Size: 050	070	100	150
	Without filter element	•		•	
A03	Inorganic microfiber 3 µm	•	•	•	•
A10	Inorganic microfiber 10 µm	•	•	•	•
P10	Resin impregnated paper 10 µm	•	•	•	•

Seals

A	NBR
V	FPM

Execution

P01	MP Filtri standard
Pxx	Customized

FILTER ELEMENT

Configuration example : CG | 150 | A10 | V | P01

Filter element series		Threaded connection: G1	G2
CS	Connection ISO 228	•	
CG	Connection U.S. standard		•

Filter element size
050 | **070** | **100** | **150**

Filtration rating

A03	Inorganic microfiber 3 µm
A10	Inorganic microfiber 10 µm
P10	Resin impregnated paper 10 µm

Seals

A	NBR
V	FPM

Execution

P01	MP Filtri standard
Pxx	Customized

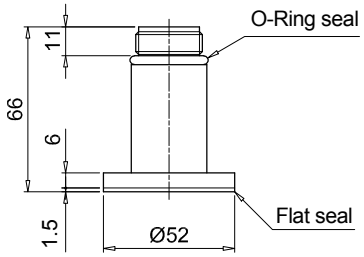

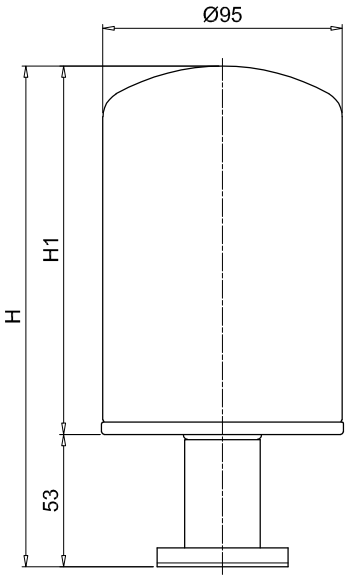

Holes on the tank

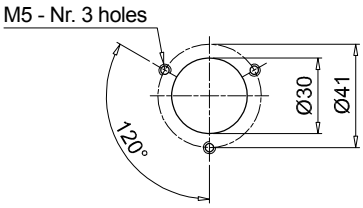

SCS050-070 Screwed flange		
Size	**H [mm]**	**H1 [mm]**
050	199	146
070	263	210

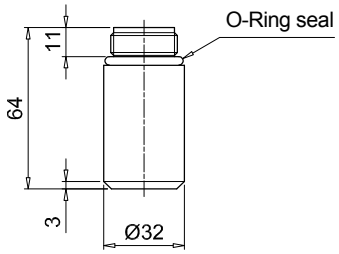

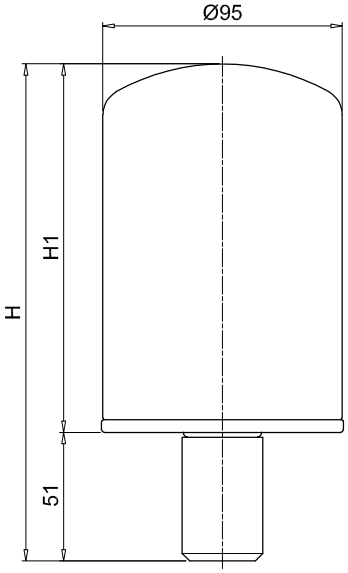

SCS050-070 Weld riser		
Size	**H [mm]**	**H1 [mm]**
050	197	146
070	261	210

Dimensions

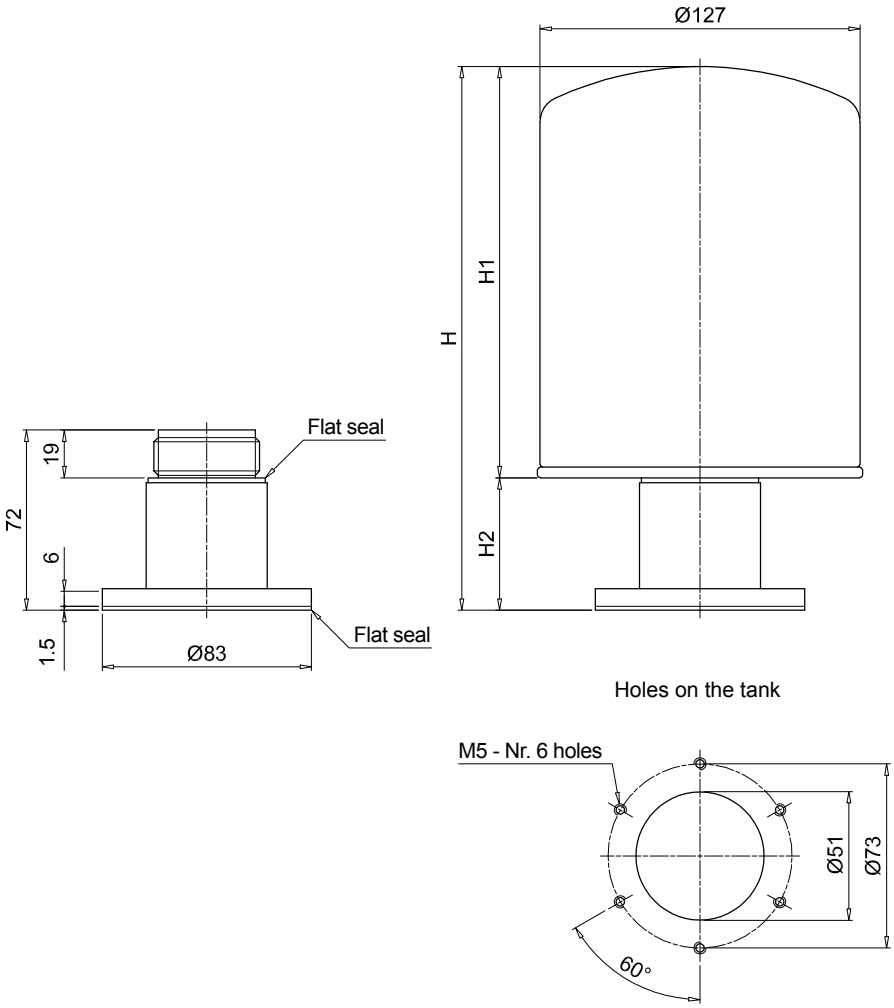

SCS100-150 Screwed flange				
Size	**Connections**	**H [mm]**	**H1 [mm]**	**H2 [mm]**
100	G1	231	178	53
	G2	215	184	31
150	G1	280	227	53
	G2	301	270	31

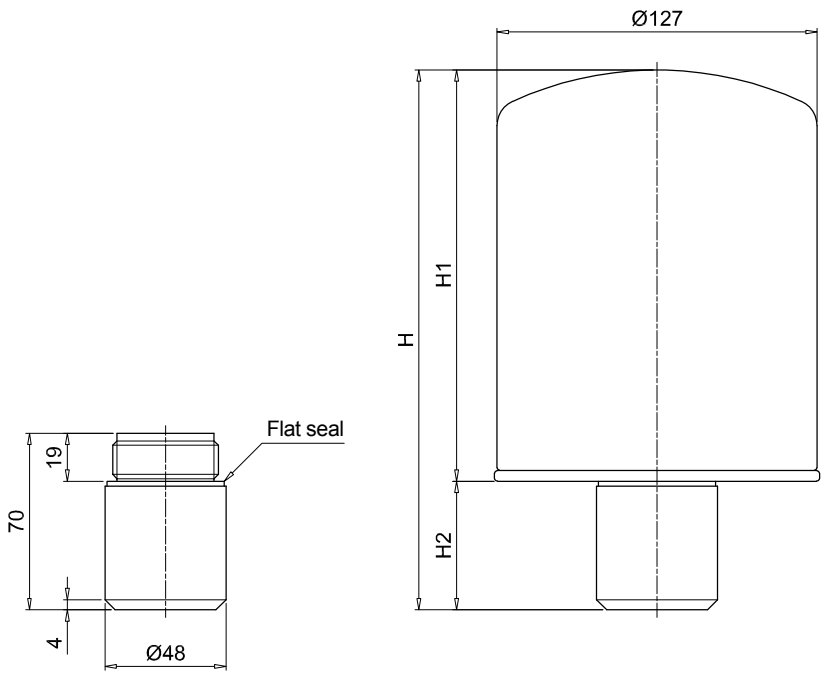

SCS100-150 Weld riser				
Size	**Connections**	**H [mm]**	**H1 [mm]**	**H2 [mm]**
100	G1	229	178	51
	G2	213	184	29
150	G1	278	227	51
	G2	299	270	29

SME 1 - SMF 1 - SML 1 series

Risers for breathers and filler caps installation

Technical data

Air breathers & Filler plugs

Risers for breathers and filler caps installation

SME/SMF/SML are ranges of risers for installation of the breathers and filler caps in any place on the tank.
They make the maintenance operation easy and fast.

Available features:

- SME: vertical riser made of polyamide for nylon tanks, mainly used in the mobile machines
- SMF: sloping riser made of polyamide for nylon tanks, mainly used in the mobile machines
- SML: sloping riser made of aluminum for metal tanks, mainly used in the industrial equipment and heavy-duty applications

Materials SME

- Body: Nylon
- Seals: NBR
  Cork gasket
- Screws: Phosphatized steel
  Galvanized steel

Materials SMF

- Body: Nylon
- Seals: NBR
  Cork gasket
- Screws: Phosphatized steel
  Galvanized steel

Materials SML

- Body: Aluminium
- Seals: NBR
  Cork gasket
- Screws: Phosphatized steel

Temperature

From -25 °C to +100 °C

Weight

SME - 0.250 kg
SMF - 0.325 kg
SML - 0.380 kg

Designation & Ordering code

SME / SMF / SML

Configuration example: SMF1 | M | A | P01

Series and size

SME1	Polyamide vertical riser
SMF1	Polyamide sloping riser
SML1	Aluminium sloping riser

Connections to the tank

M	Metric screws
U	UNC screws

Seals

A	NBR

Execution		Series SME1	SMF1	SML1
P01	MP Filtri standard		•	•
P02	Standard without logo	•		
Pxx	Customized	•	•	•

SME1

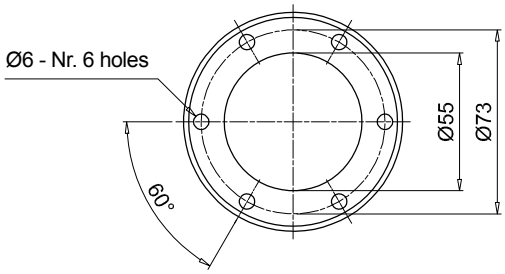

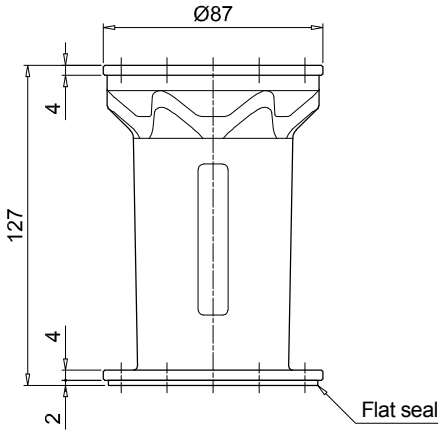

Holes on the flange

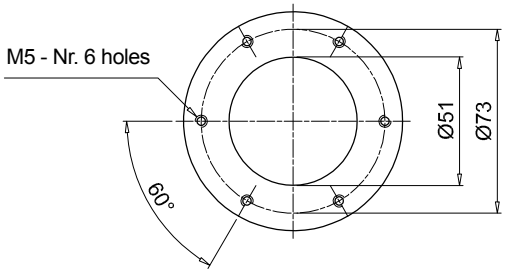

SME 1 - SMF 1 - SML 1

Dimensions

SMF1

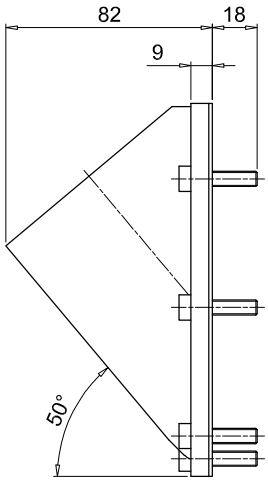

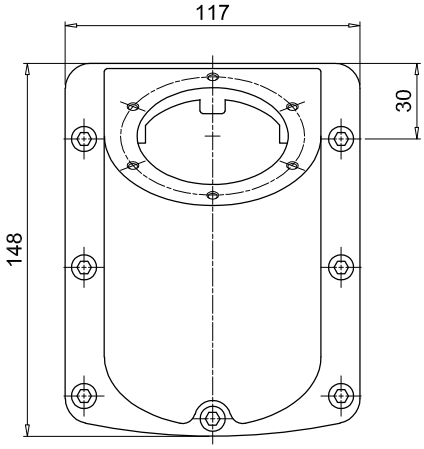

Holes on the tank

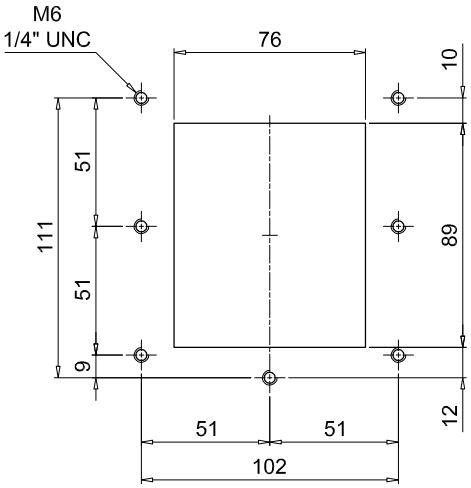

Holes on the flange

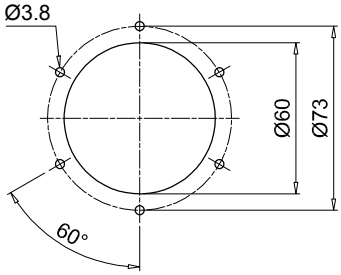

SML1

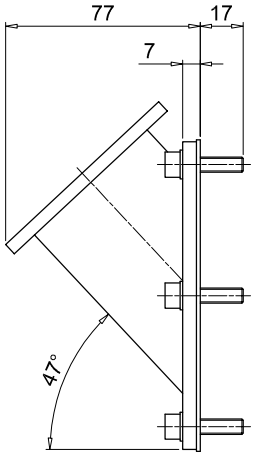

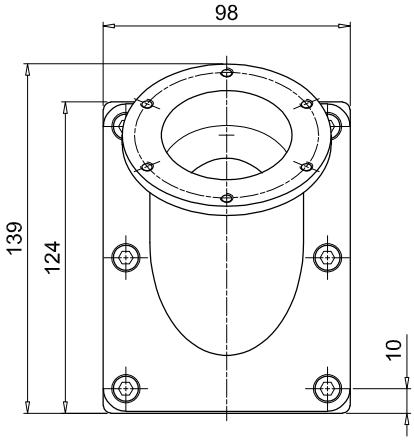

Holes on the tank

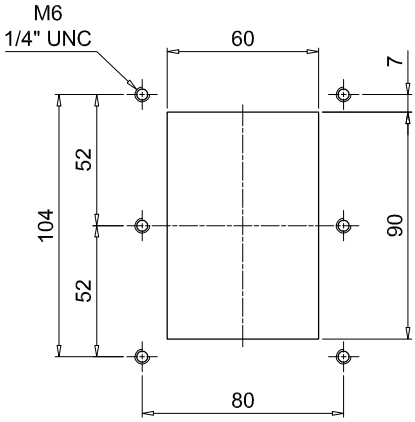

Holes on the flange

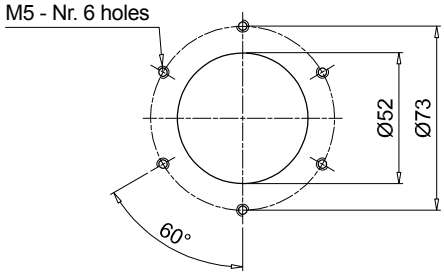

TA 46 TAP 50 SAP 50 series

Metal oil filler and air breather filler cap

Nylon oil filler and breather plug

Nylon air breather filter

TA 46 GENERAL INFORMATION

Technical data

Air breathers & Filler plugs

Metal oil filler and air breather filler cap
Flow rate up to 200 l/min

TA46 is a range of compact metal air breathers and filler caps for protection of the tank against the solid contamination contained into the air and filling of the fluid into the systems during the commissioning and maintenance procedures. They are usually directly fitted on the tank. The robust design allows the use of these filters in any heavy-duty application.

Available features:
- Male threaded connections up to 1/4" and flanged connection with bayonet, for a maximum flow rate of 200 l/min
- Fine cellulose filtration, to get a good cleanliness level into the reservoir
- Filling basket, to hold the coarse contamination contained into the fluid and to diffuse the fluid flow into the tank

Common applications:
- Compact hydraulic systems
- Compact mobile machines
- Industrial equipment

Flow rate Δp 0.02 bar

	Flow rate [l/min]	
Filtration rating	03	10
TA46	150	200

Materials (version G/N)
- Cover: Chrome plated steel
- Filter element: Resin impregnated paper, Polyurethane
- Flange: Galvanized steel
- Connection: Phosphatized steel

Materials (version B)
- Cover: Chrome plated steel
- Filter element: Resin impregnated paper, Polyurethane
- Flange: Galvanized steel
- Connection: Phosphatized steel
- Seals: NBR
- Chain, ring: Cork gasket
- Screws: Galvanized steel
- Basket: Brass

Temperature
From -25 °C to +100 °C

Weight
TA 46 B 0.10 kg
TA 46 G/N 0.11 kg

Designation & Ordering code

COMPLETE AIR BREATHER - TA46

Configuration example 1 :	TA46	B	03	A	0	0	1	P01
Configuration example 2 :	TA46	G	10					P01

Series and size
TA46

Connections to the tank

B	Screwed flange with bayonet mount
G	Thread G 1/4"
N	Thread 1/4" NPT

Filtration rating

03	Resin impregnated paper	3 µm
10	Polyurethane	10 µm

Seals	Connection:	B	G	N
A NBR		•		

Valve	Connection:	B	G	N
0 Without valve		•		

Version	Connection:	B	G	N
0 Standard		•		

Basket	Connection:	B	G	N
1 With basket		•		

Execution

P01	MP Filtri standard
Pxx	Customized

TA46

Screwed flange

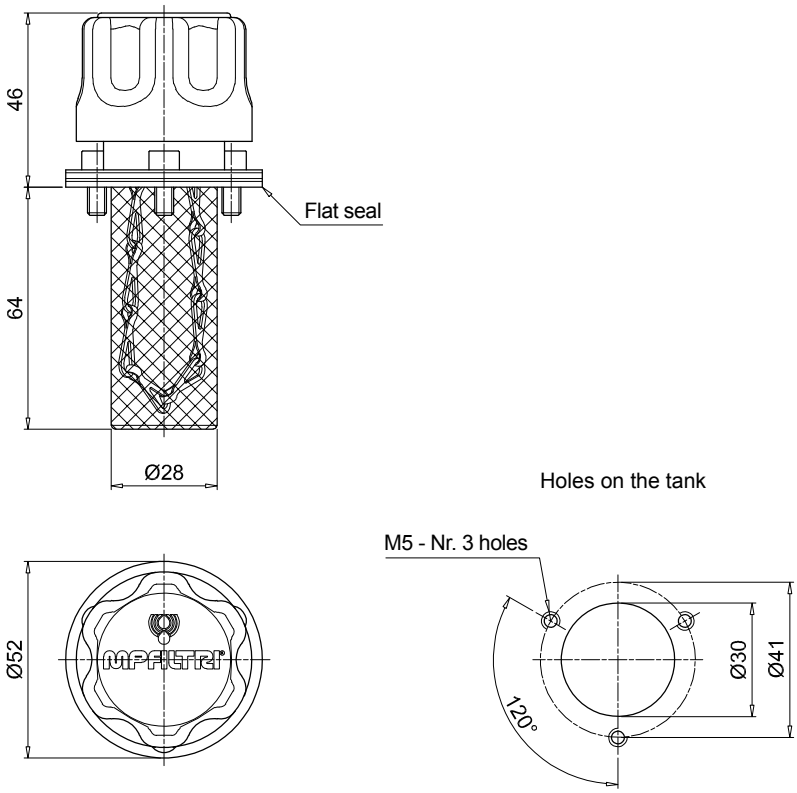

TA46

Threaded connection

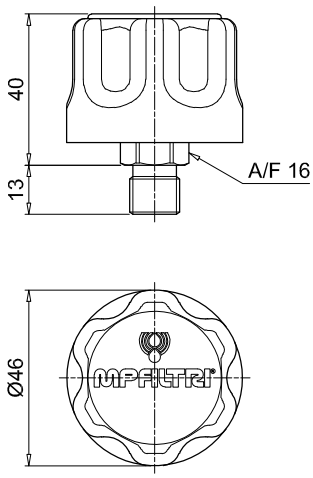

TAP 50 GENERAL INFORMATION

Technical data

Air breathers & Filler plugs

Nylon oil filler and breather plug
Flow rate up to 200 l/min

TAP50 is a range of compact plastic air breathers and filler caps for protection of the tank against the solid contamination contained into the air and filling of the fluid into the systems during the commissioning and maintenance procedures.

Available features:
- Flanged connection with bayonet, for a maximum flow rate of 200 l/min
- Fine cellulose filtration, to get a good cleanliness level into the reservoir
- Filling basket, to hold the coarse contamination contained into the fluid and to diffuse the fluid flow into the tank

Common applications:
- Compact hydraulic systems
- Compact mobile machines
- Industrial equipment

Flow rate Δp 0.02 bar

	Flow rate [l/min]	
Filtration rating	03	10
TAP50	180	202

Materials
- Cover/ringnut: Nylon
- Filter element: Resin impregnated paper, Polyurethane
- Pressurization valve: Nylon, Galvanized steel, NBR
- Seals: NBR
- Flange: Nylon
- Screws: Galvanized steel
- Basket: Nylon

Temperature
From -25 °C to +100 °C

Weight
0.60 kg

Quantity
10 pcs/pack

Designation & Ordering code

COMPLETE OIL FILLER PLUG - TAP50

Configuration example : TAP50 | C | 03 | A | 1 | 1 | P01

Series and size
TAP50 Nylon oil filler and breather plug

Connections to the tank
C Screwed flange with G 3/4" mount

Filtration rating
03 Resin impregnated paper 3 µm
10 Polyurethane 10 µm

Seals
A NBR

Valve
0 Without valve
1 0.5 bar pressurization valve

Basket
1 With basket

Execution
P01 MP Filtri standard
Pxx Customized

TAP50

Screwed flange

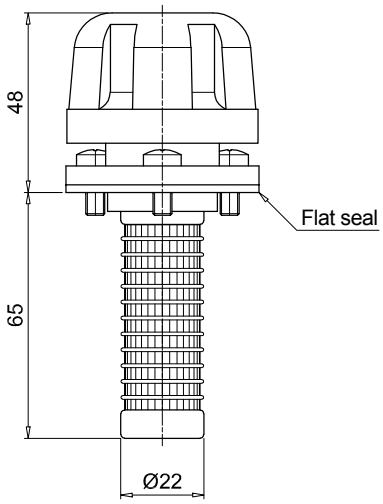

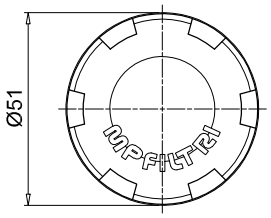

Holes on the tank

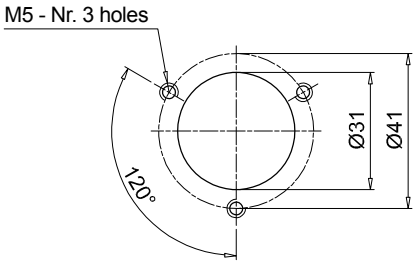

SAP 50 GENERAL INFORMATION

Technical data

Air breathers & Filler plugs

Nylon air breather filter
Flow rate up to 200 l/min

SAP50 is a range of compact plastic air breathers for protection of the tank against the solid contamination contained into the air.
The integrated air breather protects the tank against the solid contamination contained into the air. They are usually directly fitted on the tank.

Available features:
- Male threaded connections up to 3/4", for a maximum flow rate of 200 l/min.
- Fine cellulose filtration, to get a good cleanliness level into the reservoir.

Common applications:
- Compact hydraulic systems
- Compact mobile machines
- Industrial equipment

Flow rate Δp 0.02 bar

	Flow rate [l/min]	
Filtration rating	03	10
SAP50	180	204

Materials
- Cover/Connection: Nylon
- Filter element: Resin impregnated paper, Polyurethane
- Pressurization valve: Nylon, Galvanized steel, NBR
- Seals: NBR

Temperature
From -25 °C to +100 °C

Weight
0.40 kg

Quantity
10 pcs/pack

Designation & Ordering code

COMPLETE AIR BREATHER - SAP50

Configuration example : SAP50 | G3 | L03 | A | 1 | 0 | P01

Series and size

SAP50	Nylon air filter

Connections to the tank

G1	G 1/4"
G2	G 3/8"
G3	G 1/2"
G4	G 3/4"
G9	SAE 6 - 9/16" - 18 UNF
G10	SAE 12 - 1 1/16" - 12 UN

Filtration rating

L03	Resin impregnated paper	3 µm
L10	Polyurethane	10 µm

Seals

A	NBR

Valve		Connection G1	G2	G3	G4	G9	G10
0	Without valve	•	•	•	•	•	•
1	0.5 bar pressurization valve		•	•	•		•

Basket

0	Without basket

Execution

P01	MP Filtri standard
Pxx	Customized

SAP50

Threaded connection

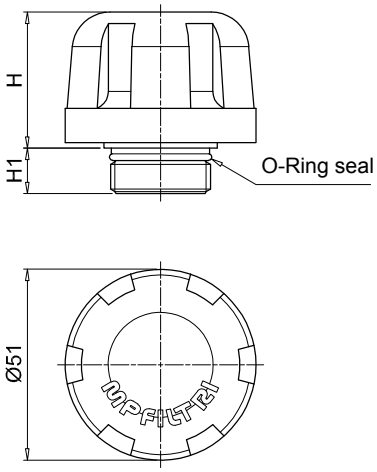

Housing on the tank
for connections GAS

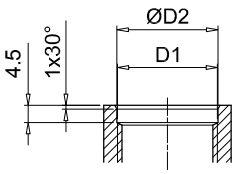

Housing on the tank
for connections SAE

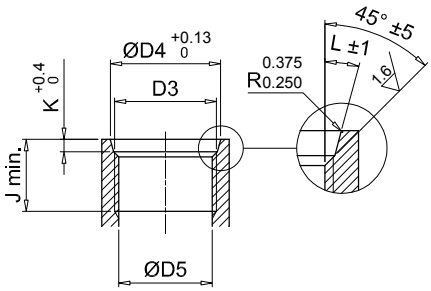

Connections	H [mm]	H1 [mm]	D1 [mm]	ØD2 [mm]	D3 [mm]	ØD4 [mm]	ØD5 [mm]	J min. [mm]	K [mm]	L
G1	36	12	G 1/4”	13.5	-	-	-	-	-	-
G2	36	12	G 3/8”	17	-	-	-	-	-	-
G3	36	12	G 1/2”	21.5	-	-	-	-	-	-
G4	36	12	G 3/4”	26.7	-	-	-	-	-	-
G9	36	12	-	-	SAE 6 - 9/16” - 18 UNF	15.6	13.081 12.751	12.7	2.5	12°
G10	35	14.5	-	-	SAE 12 - 1 1/16” - 12 UN	29.2	24.978 24.696	19	3.3	15°

TA 80 series

Metal oil filler and air breather filler cap

TA 80 GENERAL INFORMATION

Technical data

Air breathers & Filler plugs

Metal oil filler and air breather filler cap
Flow rate up to 550 l/min

TA80 is a range of metal air breathers and filler caps for protection of the tank against the solid contamination contained into the air and filling of the fluid into the systems during the commissioning and maintenance procedures.
They are usually directly fitted on the tank. The robust design allows the use of these filters in any heavy-duty application.

Available features:

- Male threaded connections up to 3/4" and flanged connection with bayonet, for a maximum flow rate of 550 l/min
- Fine cellulose filtration, to get a good cleanliness level into the reservoir
- Pressurization valve with different setting, to guarantee a positive pressure into the tank in any application with metal or plastic tanks
- Padlock tab, to secure the air breather to the tank
- Filling basket, to hold the coarse contamination contained into the fluid and to diffuse the fluid flow into the tank

Common applications:

- Hydraulic systems
- Mobile machines
- Industrial equipment

Flow rate Δp 0.02 bar

	Flow rate [l/min]	
Filtration rating	03	10
TA80	450	550

Materials

- Cover: Chrome Plated steel
- Filter element: Resin impregnated paper, Polyurethane
- Pressurization valve:
  Nylon (bodies), Galvanized steel (end cap - disk), Steel (spring), NBR (seals)
- Flange and anti-splash feature: Galvanized steel
- Seals: NBR
- Screws, Flange: Galvanized steel
- Chain, Ring: Brass
- Basket (only TA80B): Galvanized steel

Temperature

From -25 °C to +100 °C

Weight

L 80 mm 0.33 kg
L 100 mm 0.35 kg

Designation & Ordering code

COMPLETE BREATHER PLUG - TA80

Configuration example 1 :	TA80	B	03	A	0	L	1	P01
Configuration example 2 :	TA80	G	10	A	2			P01

Series and size

TA80

Connections to the tank

B	Screwed flange with bayonet mount	**G**	Thread G 3/4"
D	Weld flange with bayonet mount	**N**	Thread 3/4" NPT

Filtration rating		Connection: B	D	G	N
00	Without filter (blind filler plug)	•	•		
03	Resin impregnated paper 3 µm	•	•	•	•
10	Polyurethane 10 µm	•	•	•	•

Seals

A NBR

Valve	Filtration rating:	00	03	10
0	Without valve	•	•	•
1	0.3 bar pressurization valve		•	•
2	0.7 bar pressurization valve		•	•
9	With anti-splash feature		•	•

Version	Connection:	B	D	G	N
0	Standard	•	•		
L	With padlock tab	•			

Basket	Connection:	B	D	G	N
0	Without basket	•	•		
1	L = 80 mm	•			
3	L = 100 mm		•		

Execution

P01	MP Filtri standard
Pxx	Customized

TA80
Screwed flange

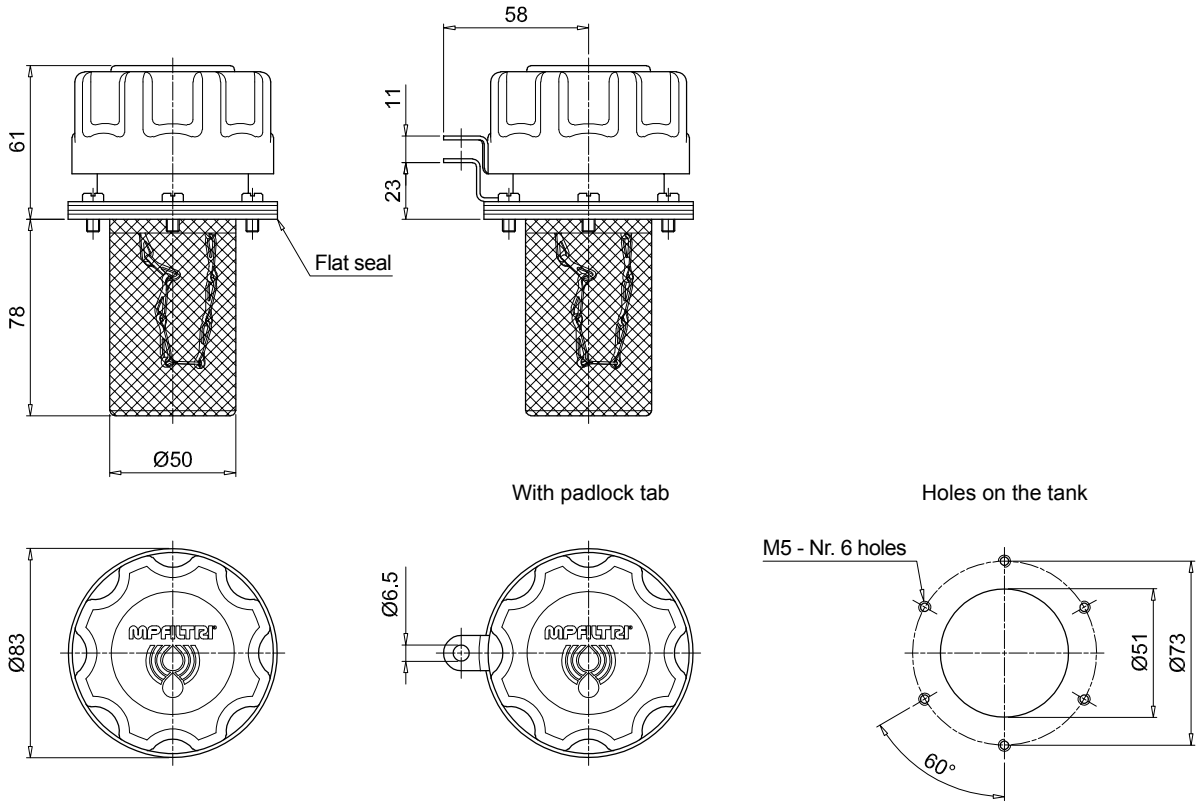

TA80
Weld flange
Threaded connection

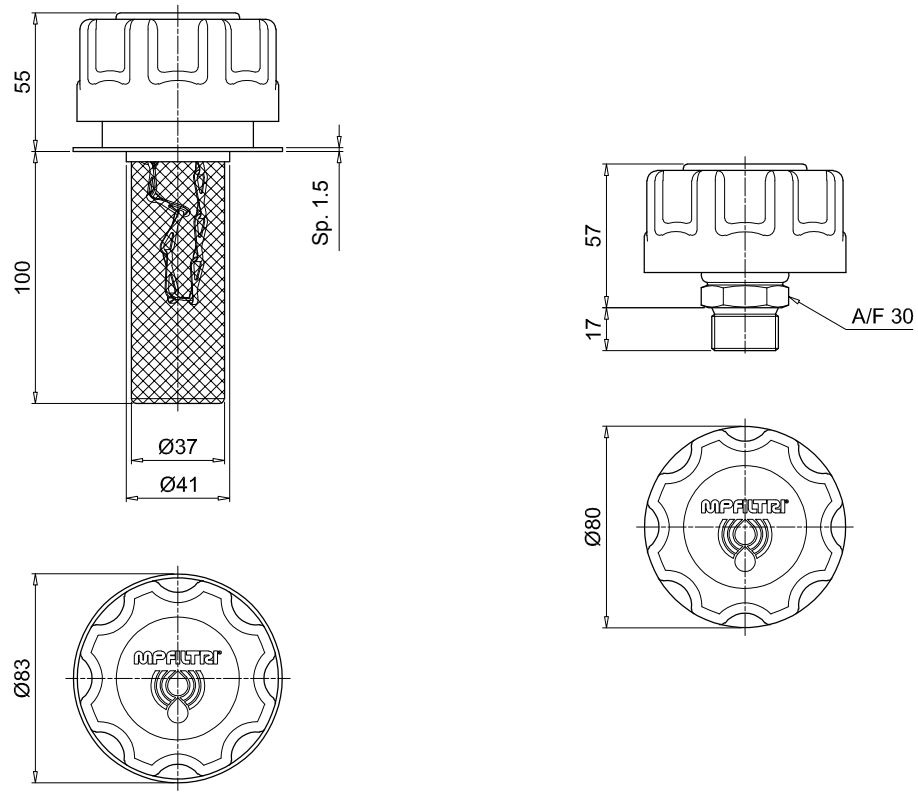

TAP 90 series

Nylon oil filler and air breather filler cap

TAP 90 GENERAL INFORMATION

Technical data

Air breathers & Filler plugs

Nylon oil filler and air breather filler cap
Flow rate up to 550 l/min

TAP90 is a range of plastic air breathers and filler caps for protection of the tank against the solid contamination contained into the air and filling of the fluid into the systems during the commissioning and maintenance procedures.
They are usually directly fitted on the tank.

Available features:

- Male threaded connections up to 1 1/2" and flanged connection with bayonet, for a maximum flow rate of 550 l/min
- Fine cellulose filtration, to get a good cleanliness level into the reservoir
- Pressurization valve with different setting, to guarantee a positive pressure into the tank in any application with metal or plastic tanks
- Padlock tab, to secure the air breather to the tank
- Filling basket, to hold the coarse contamination contained into the fluid and to diffuse the fluid flow into the tank
- Dipstick, to monitor the fluid level into the tank even in complicated positions

Common applications:

- Hydraulic systems
- Mobile machines
- Industrial equipment

Flow rate Δp 0.02 bar

	Flow rate [l/min]	
Filtration rating	03	10
TAP90	450	550

Materials

- Cover/Ringnut: Nylon
- Filter element: Resin impregnated paper, Polyurethane
- Pressurization valve:
  Nylon (bodies), Galvanized steel (end cap - disk), NBR (seals)
- Flange B: Nylon
- Seals: NBR
- Screws: Galvanized steel
- Padlock tab: Galvanized steel
- Chain, Ring: Brass
- Dipstick: Phosphatized steel
- Basket: Galvanized steel, Nylon

Temperature
From -25 °C to +100 °C

Weight
L 120 mm 0.25 kg
L 250 mm 0.31 kg

Designation & Ordering code

COMPLETE BREATHER PLUG - TAP90

Configuration example 1 :	TAP90	R	03	A	1	A	1	P01
Configuration example 2 :	TAP90	G	10	A	2	L		P01

Series and size
TAP90

Connections to the tank

R	Screwed flange with M52x2 mount	**H**	Thread G 1 1/2"
F	Screwed flange DIN 24557-2	**M**	Thread 3/4" NPT
C	Weld riser	**G**	Thread M52x2
Q	Thread G 3/4"		

Filtration rating	R	F	C	Q	H	M	G
	Connection						
00 Without filter (blind filler plug)	•	•	•				
03 Resin impregnated paper 3 µm	•	•	•	•	•	•	•
10 Polyurethane 10 µm	•	•	•	•	•	•	•

Seals

A	NBR

Valve	Filtration rating: 00	03	10
0 Without valve	•	•	•
1 0.3 bar pressurization valve		•	•
2 0.7 bar pressurization valve		•	•

Version

0	Standard	**A**	With dipstick
L	With padlock tab	**F**	With padlock tab and dipstick

Basket	R	F	C	Q	H	M	G
	Connection						
0 Without basket	•	•	•				
1 With basket 120 mm	•	•	•				
3 With basket 250 mm	•	•	•				

Execution

P01	MP Filtri standard
Pxx	Customized

TAP90

Screwed flange

Basket	H1 [mm]
1	120
3	250

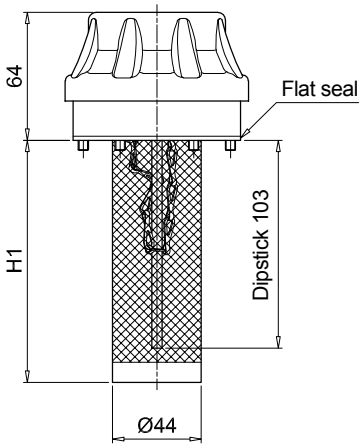

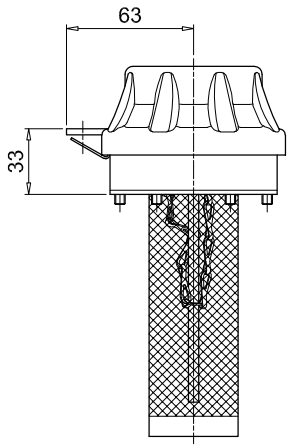

With padlock tab

Holes on the tank

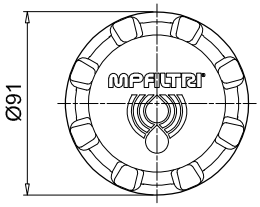

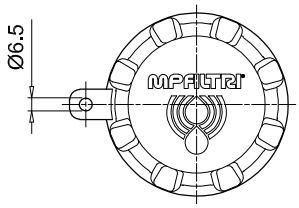

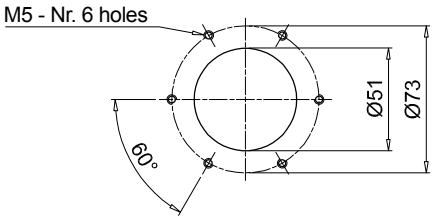

TAP90

Screwed flange

DIN 24557-2

Basket	H1 [mm]
1	120
3	250

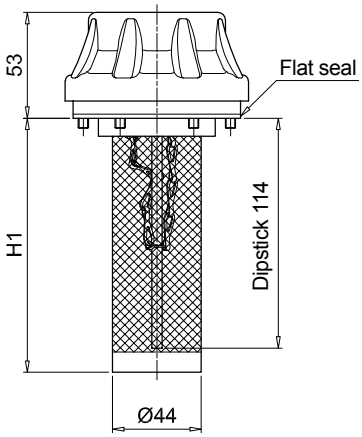

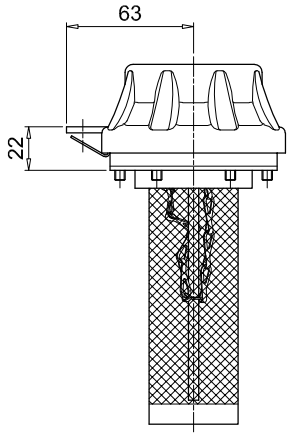

With padlock tab

Holes on the tank

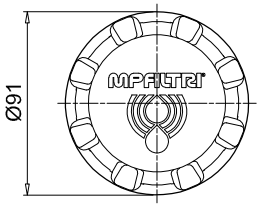

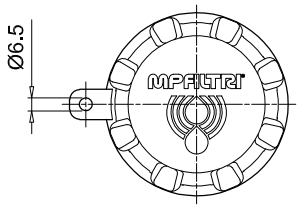

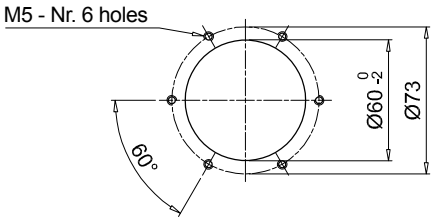

TAP 90

Dimensions

TAP90

Weld riser

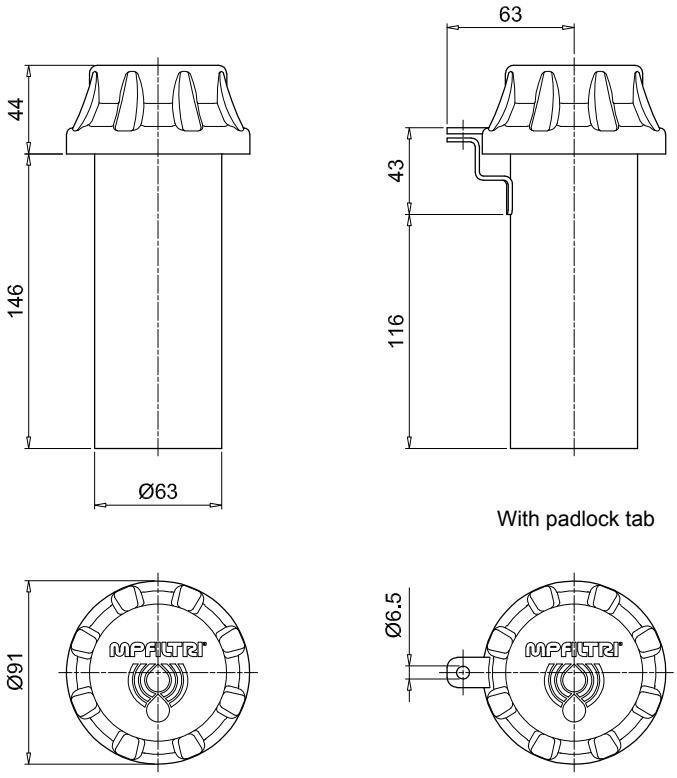

TAP90

Threaded connection

Connection	D1 [mm]	D2 [mm]	J [mm]	K [mm]
Q	G 3/4”	-	-	-
H	G 1 1/2”	48.5	8.5	2x15°
M	3/4” NPT	-	-	-
G	M 52x2	52.5	8.5	2x15°

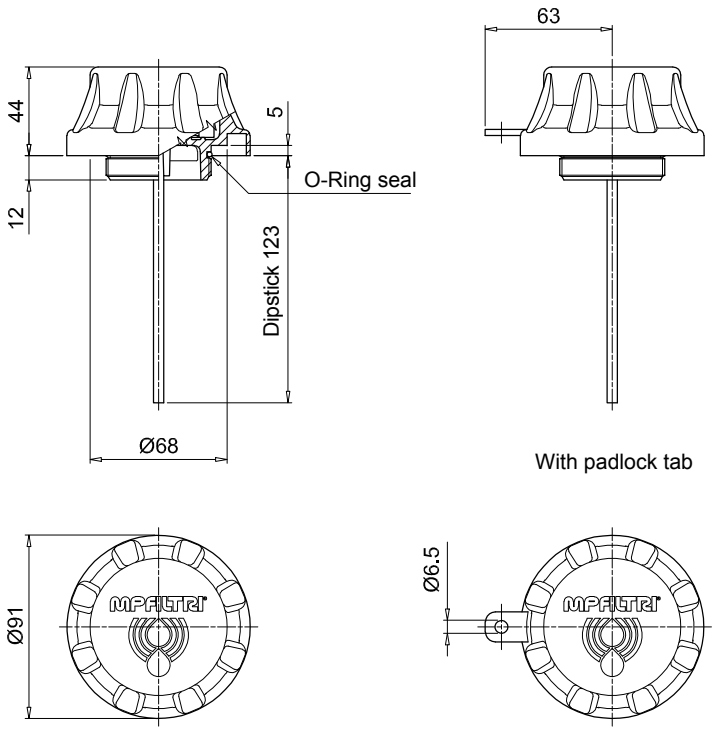

Housing on the tank
for connections GH-MT

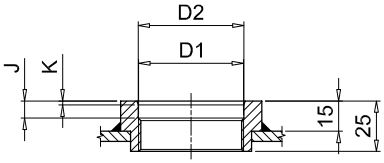

TAP 114 series

Nylon oil filler and air breather filler cap

TAP 114 GENERAL INFORMATION

Technical data

Air breathers & Filler plugs

Nylon oil filler and air breather filler cap
Flow rate up to 1600 l/min

TAP114 is a range of plastic large air breathers and filler caps for protection of the tank against the solid contamination contained into the air and filling of the fluid into the systems during the commissioning and maintenance procedures.
They are usually directly fitted on the tank.

Available features:

- Flanged connection, for a maximum flow rate of 1600 l/min
- Replaceable filter element
- Fine cellulose filtration, to get a good cleanliness level into the reservoir
- Polyester media is an option for heavy environmental conditions (high humidity, sand ….)
- Filling basket, to hold the coarse contamination contained into the fluid and to diffuse the fluid flow into the tank
- Dipstick, to monitor the fluid level into the tank even in complicated positions

Common applications:

- Hydraulic systems
- Mobile machines
- Industrial equipment

Flow rate Δp 0.02 bar

	Flow rate [l/min]
Filtration rating	L10
TAP114 length 1	1450
TAP114 length 3	1600

Materials

- Cover: Nylon
- Filter element: Resin impregnated paper
- Flange: Nylon
- Seals: NBR
- Screws: Galvanized steel
- Basket: Nylon

Temperature

From -25 °C to +100 °C

Weight

Length 1 - 0.185 kg
Length 2 - 0.200 kg

Designation & Ordering code

COMPLETE BREATHER PLUG - TAP114

Configuration example : TAP114 | 1 | L10 | A | 1 | P01

Series and size
TAP114

Length
1 | **3**

Filtration rating
L10 Resin impregnated paper 10 µm

Seals
A NBR

Version
1 With basket

Execution
P01 MP Filtri standard
Pxx Customized

FILTER ELEMENT

Configuration example : A114 | 1 | L10 | P01

Filter element series and size
A114

Length
1 | **3**

Filtration rating
L10 Resin impregnated paper 10 µm

Execution
P01 MP Filtri standard
Pxx Customized

TAP114		
Length	**H [mm]**	**H2 [mm]**
1	43	30
3	70	60

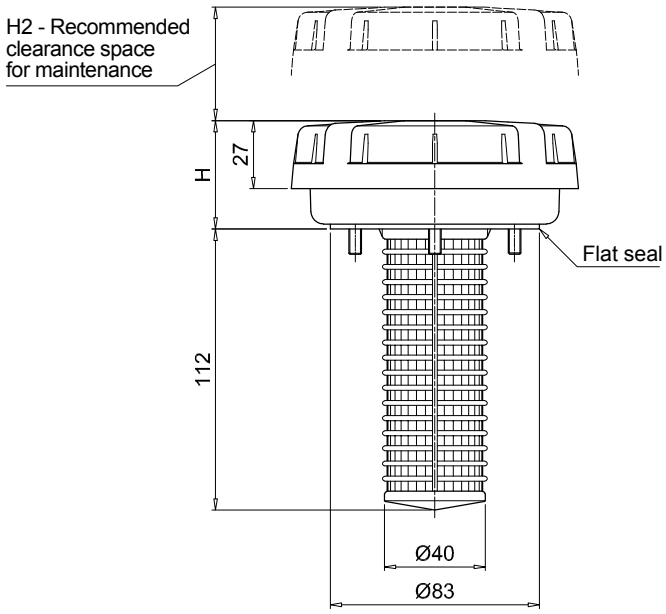

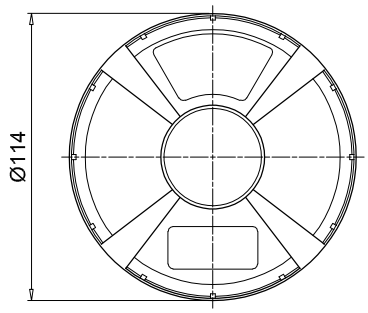

Holes on the tank

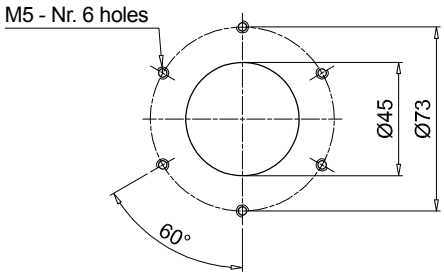

TAP 115 & SAP 115

Nylon oil filler and air breather filler cap

TAP 115 GENERAL INFORMATION

Technical data

Air breathers & Filler plugs

Nylon oil filler and air breather filler cap
Flow rate up to 2150 l/min

TAP115 is a range of plastic large air breathers and filler caps for protection of the tank against the solid contamination contained into the air and filling of the fluid into the systems during the commissioning and maintenance procedures.
They are usually directly fitted on the tank.

Available features:
- Flanged connection, for a maximum flow rate of 2150 l/min
- Replaceable filter element.
- Fine cellulose and microfibre filtration, to get a good cleanliness level into the reservoir. Polyester media is an option for heavy environmental conditions (High humidity, sand ….)
- Visual clogging indicator
- Filling basket, to hold the coarse contamination contained into the fluid and to diffuse the fluid flow into the tank

Common applications:
- Hydraulic systems
- Mobile machines
- Industrial equipment

Flow rate Δp 0.02 bar

	Flow rate [l/min]	
Filtration rating	A03	L10
TAP115 length 1	1600	2000
TAP115 length 2	2150	2150

Materials
- Cover/flange: Nylon
- Filter element: Microfibre, Resin impregnated paper
- Seals: NBR, FPM
- Basket/screws: Galvanized steel

Clogging indicators
- Manual reset
- Set pressure 0.062 bar +/- 10%

Temperature
From -25 °C to +100 °C

Weight	Length 1	Length 2
TAP 115	0.46 kg	0.585 kg

Designation & Ordering code

COMPLETE BREATHER PLUG - TAP115

Configuration example : TAP115 | 2 | F | A03 | A | 1 | A | P01

Series and size
TAP115 Screwed flange connection

Length
1 | **2**

Connection to the tank
F Flange

Filtration rating
A03 Inorganic microfiber 3 µm
L10 Resin impregnated paper 10 µm

Seals
A NBR
V FPM

Version
1 With basket

Clogging indicator
A Without indicator
B With visual clogging indicator

Execution
P01 MP Filtri standard
Pxx Customized

FILTER ELEMENT

Configuration example : A115 | 2 | A03 | P01

Filter element series and size
A115

Length
1 | **2**

Filtration rating
A03 Inorganic microfiber 3 µm
L10 Resin impregnated paper 10 µm

Execution
P01 MP Filtri standard
Pxx Customized

TAP115		
Length	**H [mm]**	**H2 [mm]**
1	91	55
2	155	80

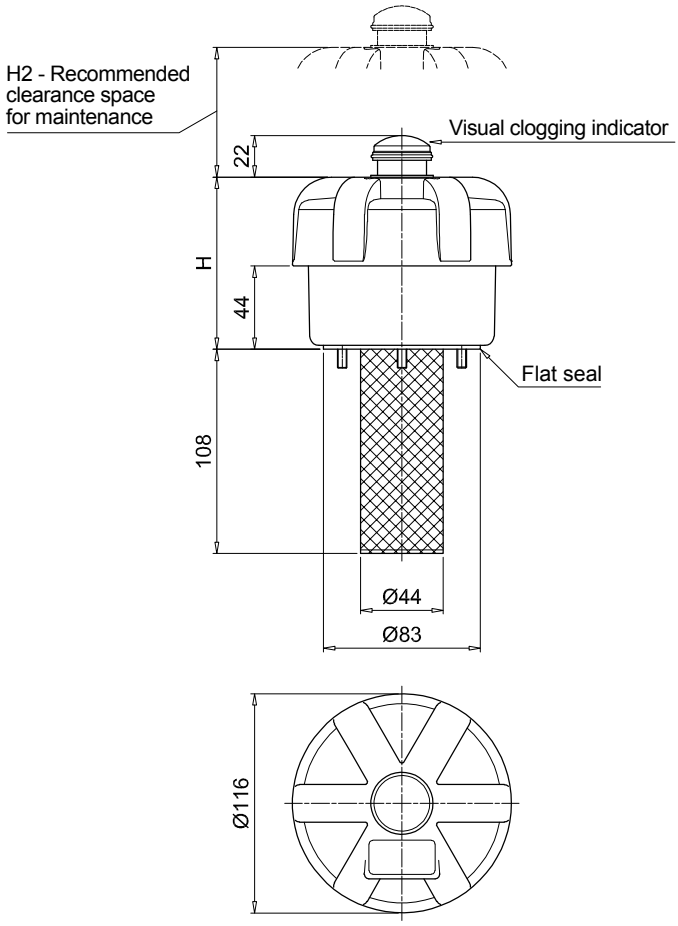

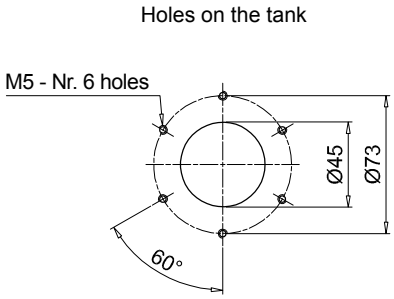

Technical data

Air breathers & Filler plugs

Nylon oil filler and air breather filler cap
Flow rate up to 3000 l/min

SAP115 is a range of plastic large air breathers for protection of the tank against the solid contamination contained into the air.
They are usually directly fitted on the tank.

Available features:

- Male threaded connections up to 1 1/2", for a maximum flow rate of 3000 l/min.
- Replaceable filter element.
- Fine cellulose and microfibre filtration, to get a good cleanliness level into the reservoir. Polyester media is an option for heavy environmental conditions (High humidity, sand ….)
- Visual clogging indicator
- Antisplash, to avoid fluid coming out through the air breather due to sloshing
- Filling basket, to hold the coarse contamination contained into the fluid and to diffuse the fluid flow into the tank

Common applications:

- Hydraulic systems
- Mobile machines
- Industrial equipment

Flow rate Δp 0.02 bar

	Flow rate [l/min]	
Filtration rating	A03	L10
SAP115 length 1 - G1"	1830	2170
SAP115 length 2 - G1"	2800	2800
SAP115 length 1 - G1 1/2"	1995	2330
SAP115 length 2 - G1 1/2"	3000	3000

Materials

- Cover/flange: Nylon
- Filter element: Microfibre, Resin impregnated paper
- Connection: Nylon
- Seals: NBR, FPM

Clogging indicators

- Manual reset
- Set pressure 0.062 bar +/- 10%

Temperature

From -25 °C to +100 °C

Weight	Length 1	Length 2
SAP 115	0.41 kg	0.525 kg

Designation & Ordering code

COMPLETE BREATHER PLUG - SAP115

Configuration example : SAP115 | 2 | A | A03 | A | 1 | A | P01

Series and size
SAP115 Threaded connection

Length
1 | **2**

Connection to the tank
A Thread G 1"
C Thread G 1 1/2"

Filtration rating
A03 Inorganic microfiber 3 µm
L10 Resin impregnated paper 10 µm

Seals
A NBR

Version
0 Standard
1 With anti-splash feature

Clogging indicator
A Without indicator
B With visual clogging indicator

Execution
P01 MP Filtri standard
Pxx Customized

FILTER ELEMENT

Configuration example : A115 | 2 | A03 | P01

Filter element series and size
A115

Length
1 | **2**

Filtration rating
A03 Inorganic microfiber 3 µm
L10 Resin impregnated paper 10 µm

Execution
P01 MP Filtri standard
Pxx Customized

SAP115							
Length	Connection	H [mm]	H1 [mm]	H2 [mm]	H3 [mm]	H4 [mm]	A/F [mm]
1	A	106	18	55	17	42	41
	C	111	23	55	22	42	55
2	A	170	18	80	17	106	41
	C	175	23	80	22	106	55

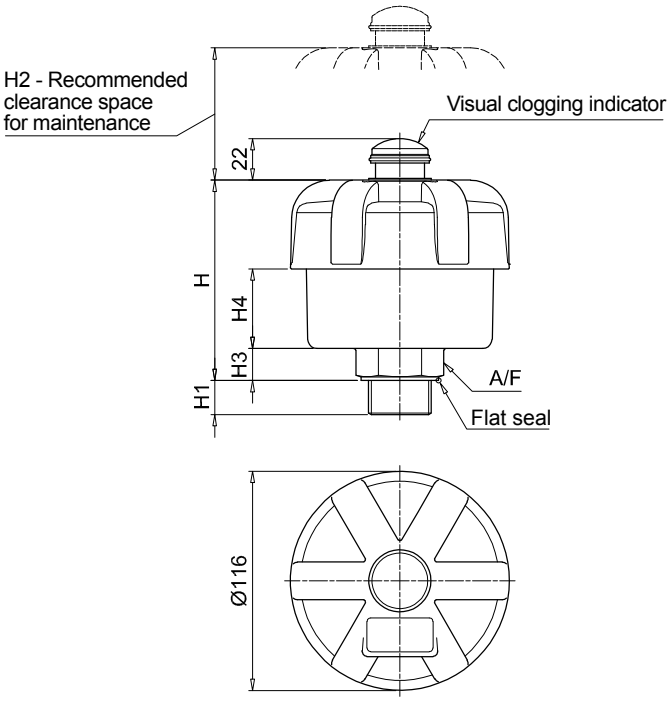

The filler plugs series is composed by different versions: with breather filter, with dipstick for measuring the reservoir fluid level or with anti-splash fins to prevent spillage of oil from the reservoir to be specifically used on mobile equipments.

Filler and Drain Plugs

TC 50	page 75
TKT - TSD - TKM	79

TC 50 series

Nylon filler cap

TC 50 GENERAL INFORMATION

Technical data

Filler plugs

Nylon filler plug

TC50 is a range of plastic compact air breathers and filler plugs for protection of the tank against the solid contamination contained into the air and filling of the fluid into the systems during the commissioning and maintenance procedures.
They are usually directly fitted on the tank.

Available features:
- G 1" male threaded connection, with or without nut
- Metal filtration, to hold the coarse contamination contained into the air
- Filling basket, to hold the coarse contamination contained into the fluid and to diffuse the fluid flow into the tank
- Caps with different graphics and colours, for the use in several applications

Common applications:
- Hydraulic systems
- Mobile machines
- Industrial equipment

Materials
- Cover: Nylon
- Filter element: Galvanized steel
- Filler cap: Nylon
- Strainer: Galvanized steel / Nylon
  AISI 304 / Nylon
- Collar: Nylon
- Seals: Inorganic fibre
- Ringnut: Phosphatized steel

Temperature
From -25 °C to +100 °C

Weight
TC 50 G1" conn. 0.70 kg
TC 50 with ringnut 0.10 kg

Quantity
25 pcs/pack

Designation & Ordering code

FILLER PLUG - TC50

Configuration example : TC50 | G1 | L90 | P | R | O | C70 | P01

Series and size
TC50

Connections to the tank
G1 G 1"
GA With ringnut

Filtration rating
L90 Galvanized steel

Seals
P Inorganic fiber

Cover colour
R Red
Y Yellow

Cover wording
O Oil
N Neutral

Basket
S Without basket
C70 L = 70 mm - galvanized steel
I70 L = 70 mm - AISI 304

Execution
P01 MP Filtri standard
Pxx Customized

TC50
Threaded connection

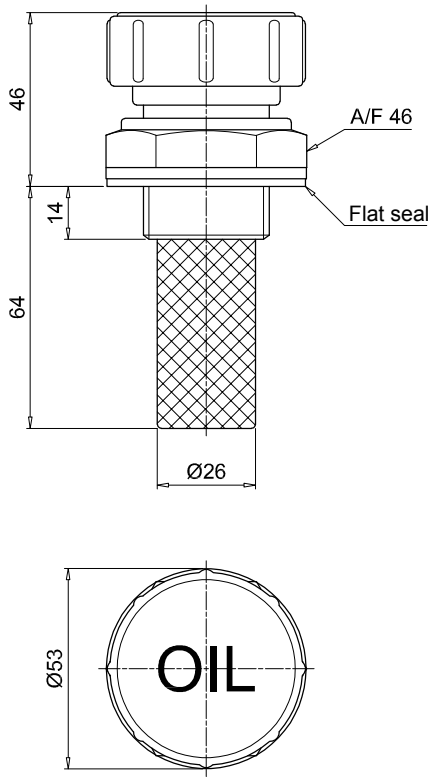

TC50
With ringnut

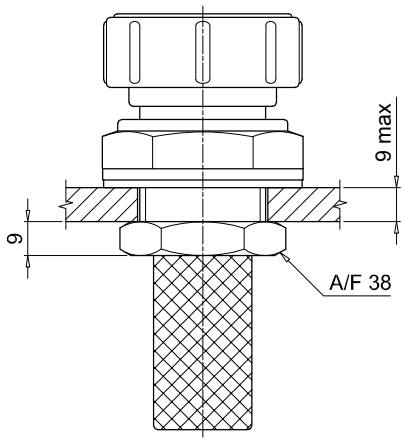

Through hole on the tank

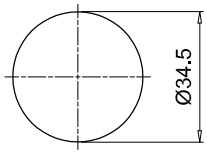

TKT - TSD - TKM series

Nylon and aluminium filler and drain plugs

TKT GENERAL INFORMATION

Technical data

Filler plugs

Nylon filler plug

TKT is a range of nylon compact filler plugs for filling of the fluid into the systems during the commissioning and maintenance procedures. They are usually directly fitted on the tank.

Available features:

- Male threaded connections up to G 2”
- Breathing hole, to reduce the pressure inside the filter during the maintenance operations
- Caps with different graphics and colours, for the use in several applications
- Dipstick, to monitor the fluid level into the tank even in complicated positions
- Antisplash, to avoid fluid coming out through the air breather due to sloshing
- Labyrinth filter, to avoid fluid coming out through the air breather due to sloshing

Common applications:

- Hydraulic systems
- Mobile machines
- Industrial equipment

Materials

- Body: Nylon
- Seals: NBR, Inorganic fibre
- Labyrinth: Nylon
- Anti-splash feature: Resin impregnated paper
- Dipstick: Phosphatized steel

Temperature

From -25 °C to +100 °C

Weight

TKTG 13	5 g
TKTG 16	8 g
TKTG 20	10 g
TKTG 26	15 g
TKTG 33	30 g
TKTG 42	32 g
TKTG 60	35 g

Quantity

25 pcs/pack

Designation & Ordering code

FILLER PLUG - TKT

Configuration example : TKT | G26 | N | N | A | F | S | P01

Series and size

TKT

Connections to the tank		Version S	Version A	Version F	Version L
G13	Thread G 1/4”	•	•		•
G16	Thread G 3/8”	•	•	•	•
G20	Thread G 1/2”	•	•	•	•
G26	Thread G 3/4”	•	•	•	•
G33	Thread G 1”	•	•	•	
G42	Thread G 1 1/4”	•	•	•	
G48	Thread G 1 1/2”	•	•	•	
G60	Thread G 2”	•	•		

Colour

N	Black nylon

Cover wording

O	Oil	**N**	Neutral

Seals		Version S	Version A	Version F	Version L
A	NBR		•	•	
B	Inorganic fiber	•			•

Breather hole

S	Without breather hole	**F**	With breather hole

Version

S	Standard	**F**	With anti-splash feature
A	With dipstick	**L**	With labyrinth filter

Execution

P01	MP Filtri standard
Pxx	Customized

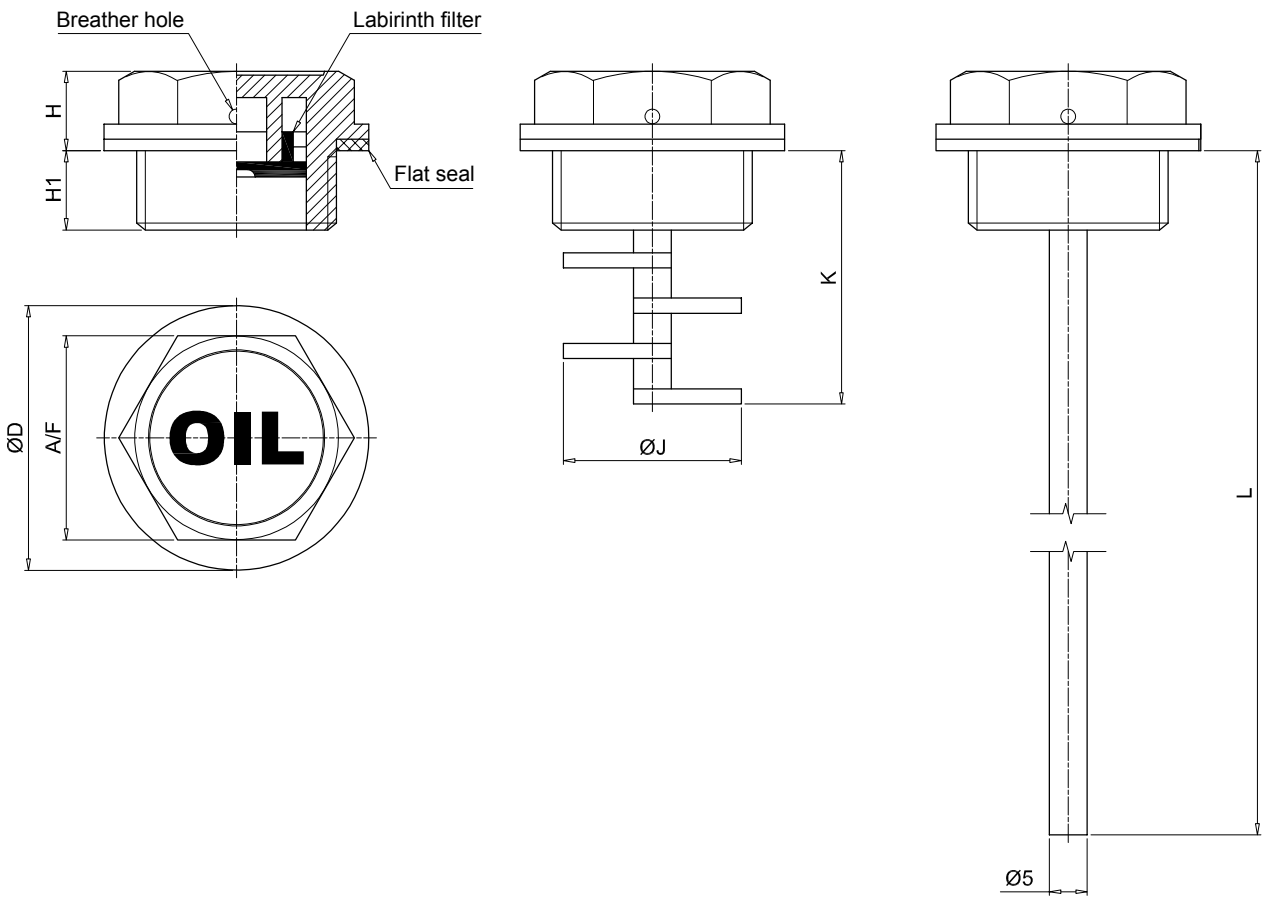

Connections	ØD [mm]	A/F [mm]	H [mm]	H1 [mm]	ØJ [mm]	K [mm]	L [mm]
G13	20	17	8.5	7.5	-	-	205
G16	22	18	9.5	8.5	13.5	32	206
G20	28	22	9.5	9.5	17.5	33	207
G26	35	27	10.5	10.5	23.5	34	208
G33	42	34	10.5	10.5	29.5	36	201
G42	52	42	11	11	38	38	201
G48	58	47	11	11	38	36	201
G60	74	64	18	18	-	-	198

TSD GENERAL INFORMATION

Technical data

Filler plugs

Nylon filler plug

TSD is a range of nylon compact air breathers and filler plugs for protection of the tank against the solid contamination contained into the air and filling of the fluid into the systems during the commissioning and maintenance procedures.
They are usually directly fitted on the tank.

Available features:
- Male threaded connections up to G 1 1/2”
- Metal filtration, to hold the coarse contamination contained into the air
- Caps with different graphics and colours, for the use in several applications
- Dipstick, to monitor the fluid level into the tank even in complicated positions
- Antisplash, to avoid fluid coming out through the air breather due to sloshing

Common applications:
- Hydraulic systems
- Mobile machines
- Industrial equipment

Materials
- Body: Nylon
- Cover: Nylon
- Seal: NBR
- Filter: Galvanized steel
- Anti-splash feature: Nylon
- Dipstick: Phosphatized steel

Temperature
From -25 °C to +100 °C

Weight

TSDG16	15 g
TSDG20	25 g
TSDG26	28 g
TSDG33	60 g
TSDG42	69 g
TSDG48	74 g

Quantity
25 pcs/pack

Designation & Ordering code

FILLER PLUG - TSD

Configuration example : TSD | G26 | R | G | A | F | S | P01

Series and size

TSD	

Connections to the tank

G16	Thread G 3/8”	**G33**	Thread G 1”
G20	Thread G 1/2”	**G42**	Thread G 1 1/4”
G26	Thread G 3/4”	**G48**	Thread G 1 1/2”

Cover colour

R	Red	**Y**	Yellow

Cover wording

O	Oil
N	Neutral
G	Gasoil

Seals

A	NBR

Filter element		Cover wording N	O	G
0	Without filter element	•	•	•
A	Steel filter element	•	•	

Version

S	Standard
A	With dipstick
F	With anti-splash feature

Execution

P01	MP Filtri standard
Pxx	Customized

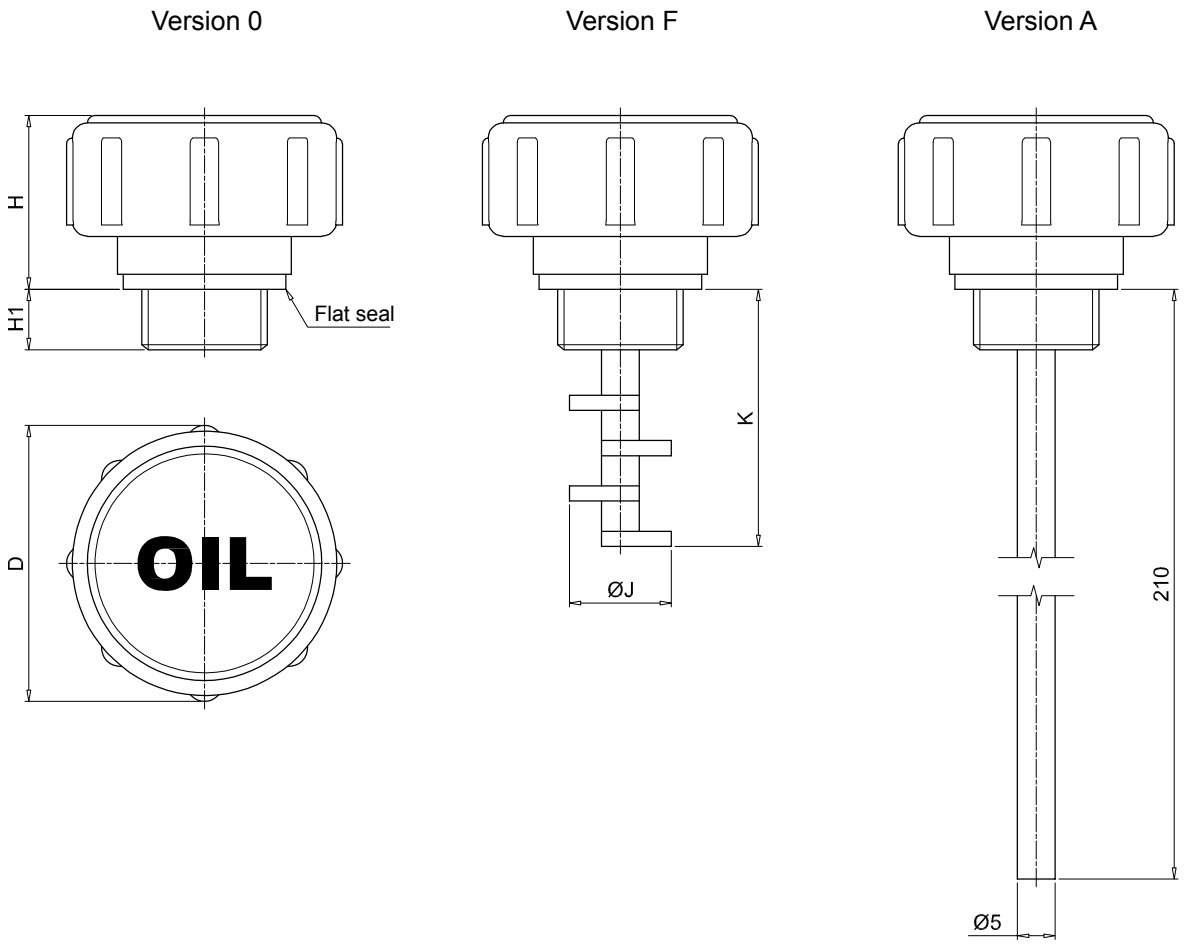

Connections	ØD [mm]	H [mm]	H1 [mm]	ØJ [mm]	K [mm]
G16	36.5	23	8	13.5	34
G20	40.5	23	9	17.5	34
G26	46.5	23	10	23.5	35
G33	52.5	24	11	29.5	42
G42	67.5	31.5	12	38	45
G48	67.5	31.5	11	38	45

TKM GENERAL INFORMATION

Technical data

Drain plugs

Aluminium magnetic drain plug

TKM is a range of aluminium compact plugs for draining of the fluid from the systems during the commissioning and maintenance procedures. They are usually directly fitted on the bottom of the tank.
The integrated magnet holds the ferrous contamination.

Available features:
- Male threaded connections up to G 1”

Common applications:
- Hydraulic systems
- Mobile machines
- Industrial equipment

Materials
- Body: Aluminium
- Seal: Inorganic fibre

Temperature
From -25 °C to +100 °C

Weight

TKMG13	14 g
TKMG16	23 g
TKMG20	42 g
TKMG26	95 g
TKMG33	98 g

Quantity
1 pc/pack

Designation & Ordering code

DRAIN PLUG - TKM

Configuration example : TKM | G20 | B | P01

Series and size

TKM

Connections to the tank

G13	Thread G 1/4”
G16	Thread G 3/8”
G20	Thread G 1/2”
G26	Thread G 3/4”
G33	Thread G 1”

Seals

B	Inorganic fiber

Execution

P01	MP Filtri standard
Pxx	Customized

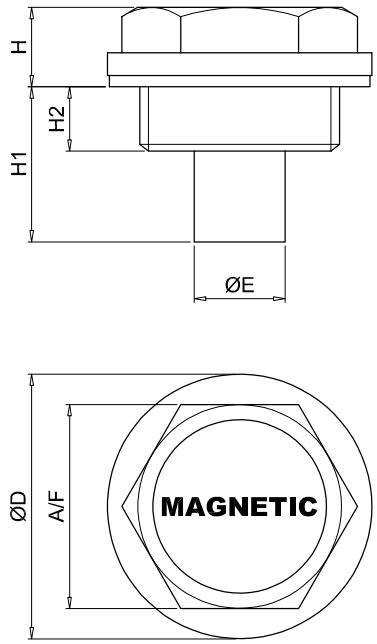

Connection	ØD [mm]	A/F [mm]	ØE [mm]	H [mm]	H1 [mm]	H2 [mm]
G13	19	15	9.5	6	11.5	5.5
G16	22	18	8	9.5	13.5	7.5
G20	28	22	10	9.5	15.5	7.5
G26	35	27	12	10.5	20.5	8.5
G33	42	34	25	13	30.5	10.5

LC

The sight plugs series allow visibility of the fluid contained in the reservoirs, showing the level and also any changes in transparency and emulsion.

LV

The oil level indicators series is available for both static and mobile applications; the construction materials used make it possible to guarantee service with wide temperature variations and compatibility with all hydraulic fluids.
LVA / LVU level indicators are available with fixing centre distance from 76 to 1000 mm.

These indicators are available in three configurations, with transparent plastic body, with black plastic body and with aluminium body.
Fixing to reservoirs with unthreaded holes or with reduced thickness can be achieved using series LCC equipped with expansion kit.

Visual Oil Level Indicators

LCP - LCC	page 89
LVA - LVU	95

LCP - LCC series

Visual oil level indicators

LCP GENERAL INFORMATION

Technical data

Visual oil level indicators

LCP is a range of plastic compact fluid level indicators, usually called spy eyes, for monitoring of the fluid level into the tank. They are directly fitted on the tank side.
Housings made of polyamide or steel can be selected, to meet every condition.

Available features:
- Male threaded connections up to G 2”
- Baffle, to allow an easy monitoring of the level
- Expansion kit, for reliable sealing even in thanks with thin walls

Common applications:
- Hydraulic systems
- Mobile machines
- Industrial equipment

T Series

Weight
LCPG13 1 g
LCPG16 2 g
LCPG20 4 g
LCPG26 8 g
LCPG33 10 g
LCPG42 12 g

Materials
- Body: Polyamide
- Contrast screen: Nylon
- Seals: NBR

M Series

Weight
LCPG20 6 g
LCPG26 9 g
LCPG33 13 g

Materials
- Body: Aluminium
- Lens: Thermoplastic
- Contrast screen: Nylon
- Seals: Inorganic fibre

N Series

Weight
LCPG13 2 g
LCPG16 4 g
LCPG20 7 g
LCPG26 9 g
LCPG30 12 g
LCPG33 18 g
LCPG42 25 g
LCPG48 48 g
LCPG60 59 g

Materials
- Body: Nylon
- Lens: Thermoplastic
- Contrast screen: Nylon
- Seals: Inorganic fibre, NBR
- Expansion kit: Brass, NBR

Temperature
From -20 °C to + 80 °C

Quantity
25 pcs/pack

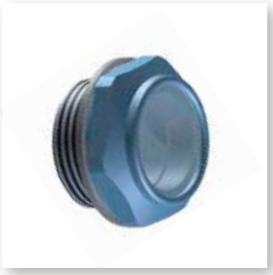

Designation & Ordering code

LCP

Configuration example 1 :	LCP	G26	N	S	B	S	P01
Configuration example 2 :	LCP	G42	T	S	A		P01
Configuration example 3 :	LCP	G20	M	C	A		P01

Series and size

LCP

Connections to the tank		Material: N	T	M
G13	Thread G 1/4”	•	•	
G16	Thread G 3/8”	•	•	
G20	Thread G 1/2”	•	•	•
G26	Thread G 3/4”	•	•	•
G33	Thread G 1”	•	•	•
G42	Thread G 1 1/4”	•	•	
G48	Thread G 1 1/2”	•		
G60	Thread G 2”	•		

Material

N	Black nylon	**T**	Transparent polyamide	**M**	Metal (aluminium)

Baffle	Material:	N								T						M
	Connection:	G13	G16	G20	G26	G33	G42	G48	G60	G13	G16	G20	G26	G33	G42	
S	Without	•	•	•	•	•	•	•	•	•	•	•	•	•	•	
C	With baffle		•	•	•	•	•	•	•				•	•	•	•

Seals	Material:	N				T	M
	Expansion kit:		S	K			
A	NBR			•		•	•
B	Inorganic fiber		•				

Expansion kit	Material:	N								T	M
	Connection:	G13	G16	G20	G26	G33	G42	G48	G60		
S	Without	•	•	•	•	•	•	•	•		
K	With expansion kit			•	•	•	•	•			

Execution

P01	MP Filtri standard
Pxx	Customized

LCP - N

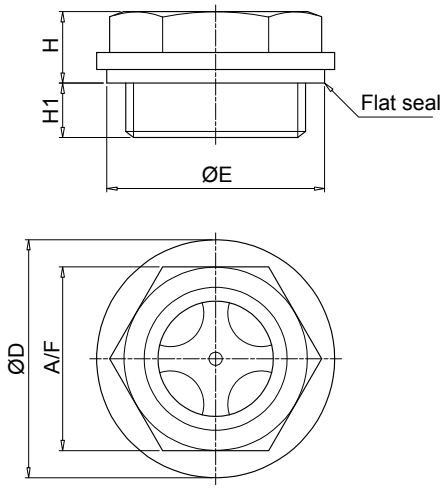

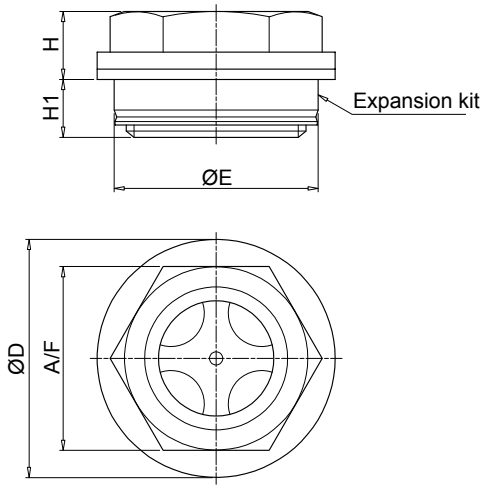

without expansion kit

Connection	ØD [mm]	ØE [mm]	A/F [mm]	H [mm]	H1 [mm]
G13	20	18.5	17	9	7
G16	22	21.5	18	10	7
G20	28	26	22	10	7
G26	35	32	27	10.5	8
G33	42	41	34	13.5	10.5
G42	52	51	42	14	11
G48	58	53.5	47	16	11
G60	74	72	64	16	18

with expansion kit

Connection	ØD [mm]	ØE [mm]	A/F [mm]	H [mm]	H1 [mm]
G20	28	26	22	9	8
G26	35	30	27	10	8.5
G33	42	40	34	13	11
G42	52	50	42	13.5	11.5
G48	58	55	47	15.5	11.5

Note: for installation onto OB Cleaning covers see page 147

LCP - T

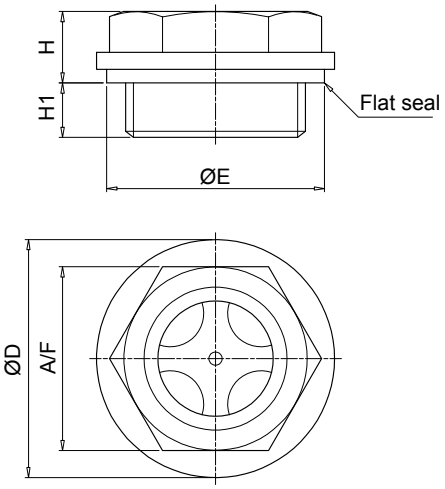

Connection	ØD [mm]	ØE [mm]	A/F [mm]	H [mm]	H1 [mm]
G13	20	18.5	15	6.5	5
G16	22	21.5	17	7	5.5
G20	28	26	21	8	6
G26	33	32	26	8.5	7
G33	41	41	32	9	8
G42	52	51	42	14	11

Note: for installation onto OB Cleaning covers see page 147

LCP - M

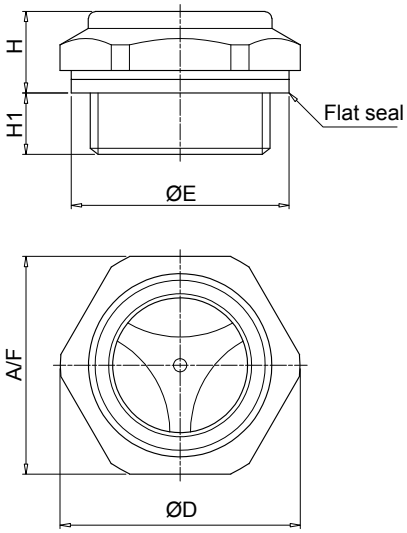

Connection	ØD [mm]	ØE [mm]	A/F [mm]	H [mm]	H1 [mm]
G20	29.5	26	27	11	7
G26	35.5	32	32	12	9
G33	44.5	41	40	13	8

LCC GENERAL INFORMATION

Technical data

Visual oil level indicators

LCC is a range of plastic compact fluid level indicators, usually called spy eyes, for monitoring of the fluid level into the tank. They are directly fitted on the tank side.
The special shape of the screen allows the monitoring of the fluid level from every position.

Available features:
- Male threaded connections up to G 2”
- Expansion kit, for reliable sealing even in thanks with thin walls

Common applications:
- Hydraulic systems
- Mobile machines
- Industrial equipment

N Series
Weight
LCCG26 7 g
LCCG42 20 g
LCCG60 40 g

Materials
- Body: Nylon
- Lens: Polyamide
- Contrast screen: Nylon
- Seals: Inorganic fibre, NBR
- Expansion kit: Brass / NBR

T Series
Weight
LCCG16 2 g
LCCG20 4 g
LCCG33 9 g

Materials
- Body: Polyamide
- Seals: NBR

Temperature
From -20 °C to + 80 °C

Quantity
25 pcs/pack

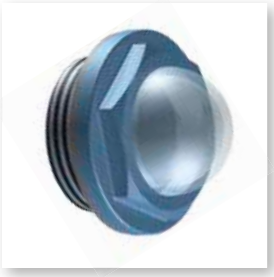

Designation & Ordering code

LCC

Configuration example 1 :	LCC	G20	N	A	K	P01
Configuration example 2 :	LCC	G33	T	A		P01

Series and size
LCC

Connections to the tank		Material: N	T
G13	Thread G 1/4”		
G16	Thread G 3/8”		•
G20	Thread G 1/2”	•	•
G26	Thread G 3/4”	•	•
G33	Thread G 1”	•	•
G42	Thread G 1 1/4”	•	
G48	Thread G 1 1/2”	•	
G60	Thread G 2”	•	

Material

N	Black nylon	**T**	Transparent polyamide

Seals	Material:	N			T
	Expansion kit:		S	K	
A	NBR			•	•
B	Inorganic fiber		•		

Expansion kit	Material:	N						T
	Connection:	G20	G26	G33	G42	G48	G60	
S	Without	•	•	•	•	•	•	
K	With expansion kit	•	•	•	•	•		

Execution

P01	MP Filtri standard
Pxx	Customized

LCC - N

without expansion kit

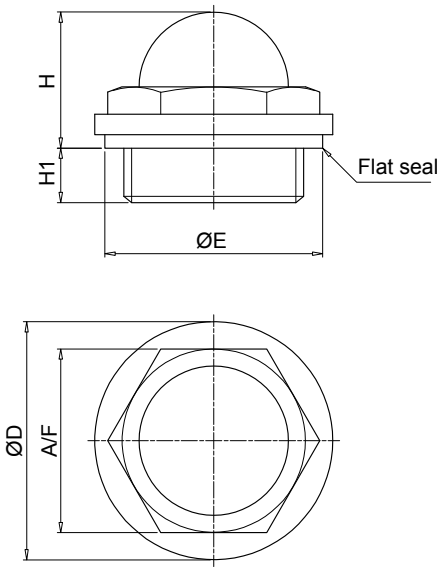

with expansion kit

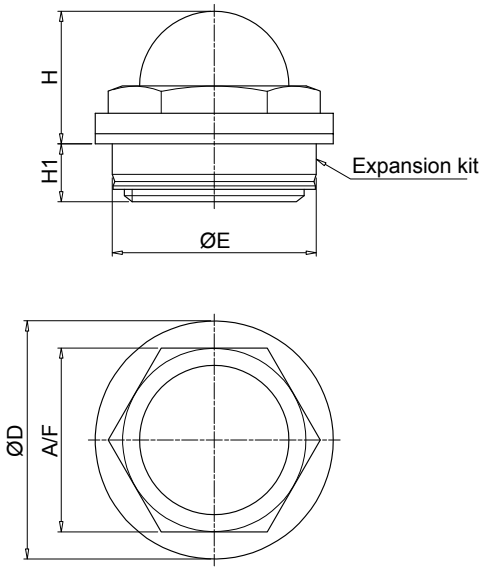

Connection	ØD [mm]	ØE [mm]	A/F [mm]	H [mm]	H1 [mm]
G20	28	26	22	17.5	17.5
G26	35	32	27	20	8
G33	42	41	34	24	10
G42	52	51	44	30	11
G48	58	53.5	50	33	11.5
G60	74	72	64	39	18

Connection	ØD [mm]	ØE [mm]	A/F [mm]	H [mm]	H1 [mm]
G20	28	26	22	16.5	8.5
G26	35	30	27	19.5	8.5
G33	42	40	34	23.5	10.5
G42	52	50	44	29.5	11.5
G48	58	55	50	32.5	12

LCC - T

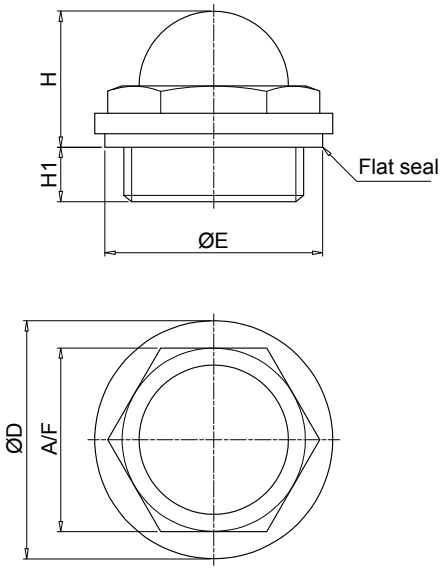

Connection	ØD [mm]	ØE [mm]	A/F [mm]	H [mm]	H1 [mm]
G13	19	18.5	15	12.5	5
G16	21.5	21.5	17	14	5.5
G20	27	26	21	16.5	6
G26	33	32	26	19	7
G33	40	41	32	22.5	8

LVA - LVU series

Visual oil level indicators

LVA GENERAL INFORMATION

Technical data

Visual oil level indicators

LVA is a range of plastic compact fluid level indicators for monitoring of the fluid level into the tank. They are directly fitted on the tank side. The fluid comes in through the lower connection screw and it is easily visible through the screen.
A white background plate, an orange line for the minimum level and a blue line for the maximum level allow an easy monitoring of the level.

Available features:
- Several male threaded connections, with or without nuts
- Three different sizes, to meet every size of tank
- Thermometer, to check the temperature of the fluid

Common applications:
- Hydraulic systems
- Mobile machines
- Industrial equipment

Materials
- Body: Transparent amorphous polyamide lens
- Nylon guard
- Seal: A -NBR / V - FPM

Operating pressure
Max 1 bar at +80°C

Operating temperature
From -25 °C to +80 °C

Weight
LVA 10 0.13 kg
LVA 20 0.18 kg
LVA 30 0.23 kg

Quantity
10 pcs/pack

Designation & Ordering code

LVA

Configuration example : LVA | 20 | T | A | P | M10 | S01

Series
LVA

Size
10 | **20** | **30**

Thermometer
S Without thermometer
T With thermometer

Seals
A NBR
V FPM

Cover material
P Polyamide

Connections
M10 Screws M10
M12 Screws M12
U38 Screws 3/8” UNC
U12 Screws G 1/2” UNC

Execution
S01 Tag MP Filtri, with nuts
S02 Tag MP Filtri, without nuts

LVA		
Size	A [mm]	H [mm]
LVA10	76	114
LVA20	127	165
LVA30	254	292

Type	B [mm]	C [mm]
LVA...M10	M10	10.5
LVA...M12	M12	12.5
LVA...U38	3/8" UNC	10.0
LVA...U12	1/2"UNC	13.5

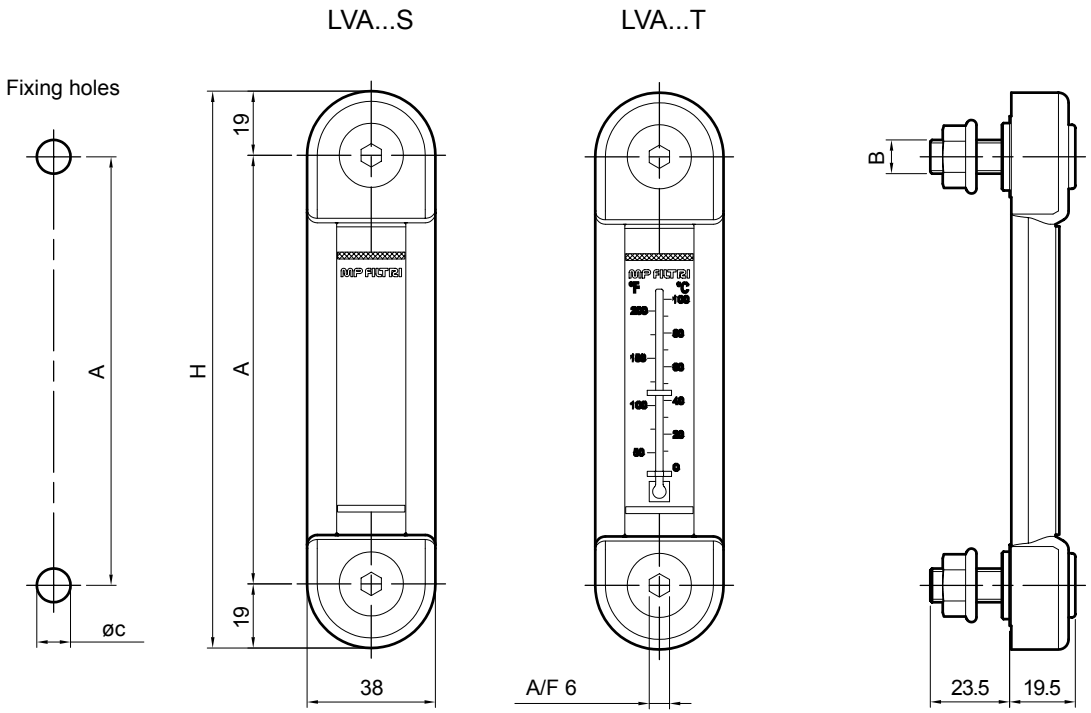

Note: for installation onto OB Cleaning covers see page 147

LVU GENERAL INFORMATION

Technical data

Visual oil level indicators

LVU is a range of plastic fluid level indicators for monitoring of the fluid level into the tank. They are directly fitted on the tank side.
The fluid comes in through the lower connection screw and it is easily visible through the screen.
A background plate, a red float and the adjustable minimum level and maximum level indicators allow an easy check of the level.

Available features:
- G 3/8" male threaded connections
- Adjustable size on request, to meet every size of tank
- Drain valve, to drop the oil for the maintenance procedures
- Glass screen and "U" protection, to meet heavy duty applications

Common applications:
- Hydraulic systems
- Mobile machines
- Industrial equipment

Materials
- Head: Nylon
- Connection G 3/8": Nickel plated brass
- G 3/8" valve: Steel
- Seal: NBR
- Pipe seal: NBR, Acrylic
- Pipe: Pyrex
- Float: Nylon
- Protection: Aluminium
- Clamps min-max: Nylon

Operating temperature
From -25 °C to +70 °C

Weight	version U	version S
LVU 0500	0.780 kg	0. 580 kg
LVU 1000	1.150 kg	0. 790 kg
LVU 1500	1.550 kg	1.100 kg
LVU 2000	1.950 kg	1.400 kg

Quantity
10 pcs/pack

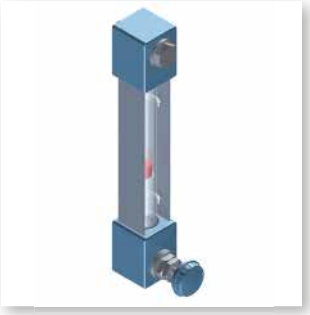

Designation & Ordering code

LVU

Configuration example : LVU | 0500 | U | A | 10 | P01

Series
LVU

Size
0500 Distance between center = 500 mm
1000 Distance between center = 1000 mm
1500 Distance between center = 1500 mm
2000 Distance between center = 2000 mm
Different sizes on request

Body		Size 500	1000	1500	2000
S	Standard plexiglass body	•	•	•	•
U	Plexiglass body, with "U" protection	•	•	•	•
P	Pyrex body, with "U" protection	•	•	•	

Seals
A NBR
V FPM

Connections
10 Connection G 3/8"
20 Connection G 3/8", with drain valve

Execution
P01 MP Filtri standard
Pxx Customized

LVU		
Size	**H [mm]**	**I [mm]**
0500	542	500
1000	1042	1000
1500	1542	1500
2000	2042	2000

Connection 10

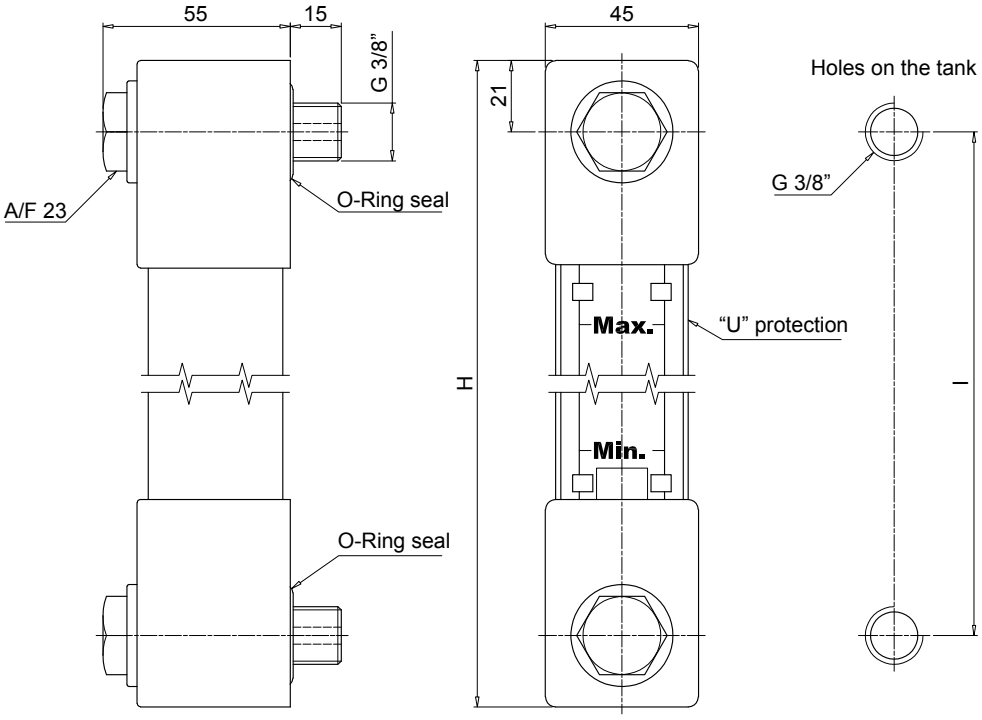

Connection 20

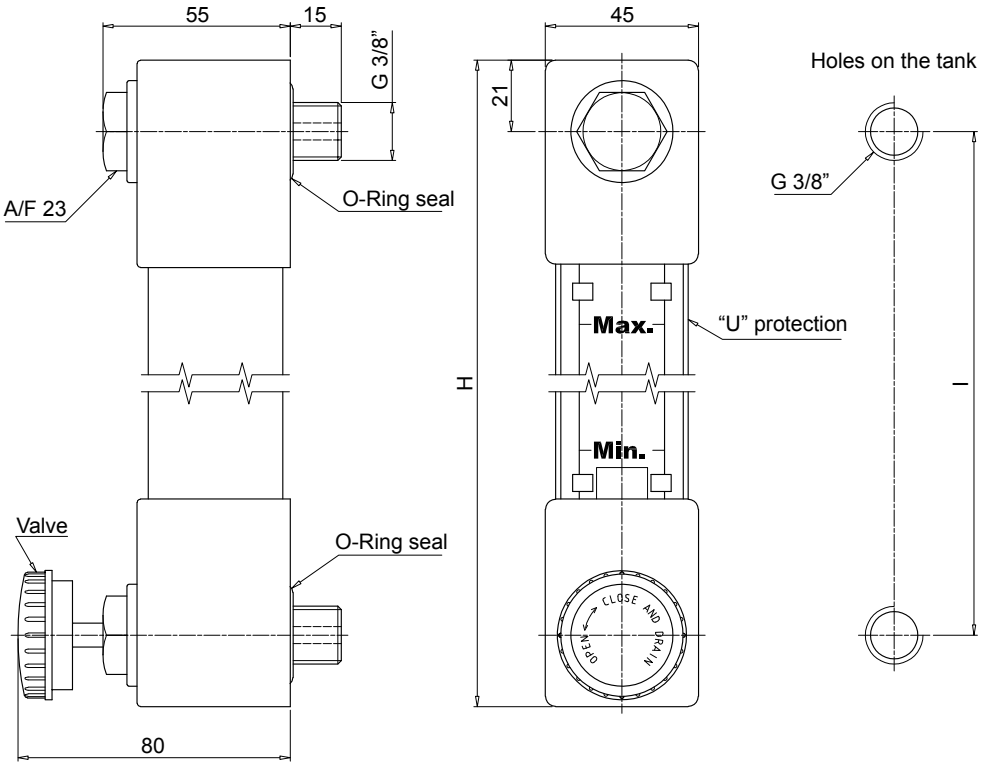

Electromagnetic float level indicators use the action of a magnet fixed to the float to change the electrical status of a reed switch mounted inside the tube.

As the fluid level in the tank changes, the float moves together with the magnet that, connected with the reed switch, move the contacts thereby tripping an alarm signal.

The movement of the float is normally limited by mechanical stops because once the magnet exceeds the point at which it activates the reed switch, the switch reverts to its original status.

To invert the contact status from N.O. to N.C. and vice versa, it is normally sufficient to invert the float.

Electrical Oil Level Indicators

LEN - LEG - LET - LEM - LEU page 103
LVK 115

LEN - LEG - LET - LEM - LEU series

Electrical oil level indicators

LEN GENERAL INFORMATION

Technical data

Electrical oil level indicators

LEN is a range of electrical fluid level indicators for monitoring of the fluid level into the tank.
They are directly fitted on the tank.
The float moves through the rod while the fluid level changes.
A magnet, fitted into the float, turns a reed sensor fixed into the rod.

Available features:
- G 1" male threaded or flanged connections
- Adjustable size on request, to meet every size of tank
- 1 or 2 floats, to monitor the minimum level, the maximum level or both of them.

Common applications:
- Hydraulic systems
- Mobile machines
- Industrial equipment

Electrical symbol:

LEN 1 Float

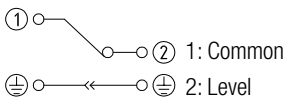

LEN 2 Floats

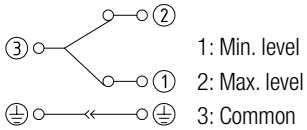

Note: to invert the contact status from NC to NO and vice versa, simply invert the float.

Materials
- Flange/Threaded body: Aluminium
- Tube: Brass, AISI 304 (on request)
- Float: Nylon foam, AISI 316 (on request)
- O-Ring: NBR
- Circlip: Phosphor bronze
- Contact: N.C. reed, N.O. (on request)

Electrical data
- Protection rating: IP65
- Max switching capacity: 80 W
- Max switching current: 1 A
- Max switching voltage: 250 Vac
- Fluid specific gravity: > 0.75

Temperature
From -15 °C to + 80 °C

Weight

LEN 1 float	0.185 kg
LEN 2 floats	0.230 kg

Designation & Ordering code

LEN

Configuration example : LEN | A | 350 | 2 | A | 1 | A | G | S | P01

Series
LEN

Tube material
A Brass

Length
150 | 200 | 250 | 350 | 400 | 500

Number of floats		Length 150	200	250	350	400	500
1	Nr. 1 float	•	•	•	•	•	•
2	Nr. 2 floats		•	•	•	•	•

Float material
A Nylon foam

Electrical switch
1 N.C. (Normally Closed)

Seals
A NBR

Connections to the tank
G Thread G 1"
F Nr. 3 holes flange

Electrical connection
S DIN 43650 connector

Execution
P01 MP Filtri standard
Pxx Customized

Connection “G”

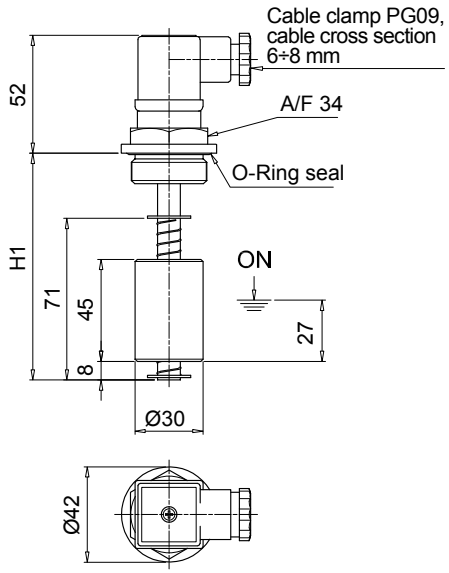

Connection “F”

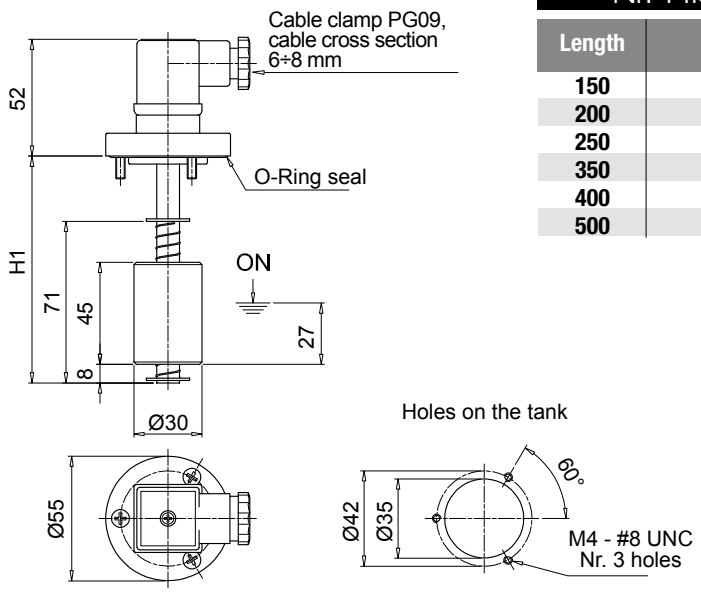

LEN

Nr. 1 float

Length	H1 [mm]
150	150
200	200
250	250
350	350
400	400
500	500

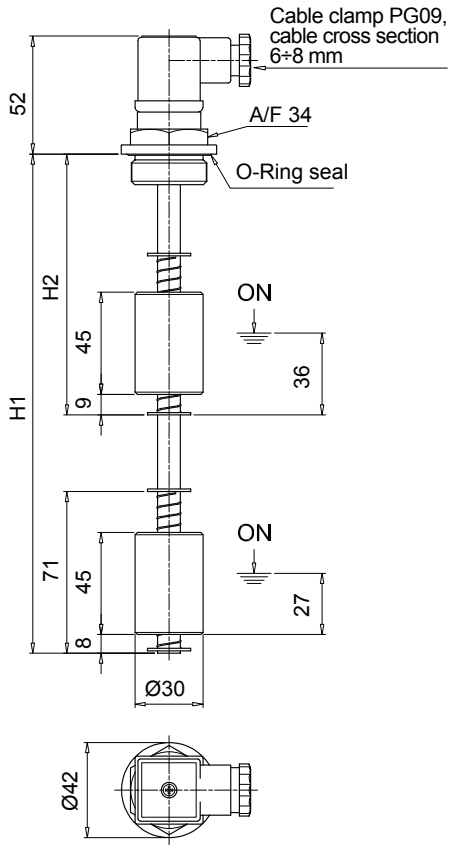

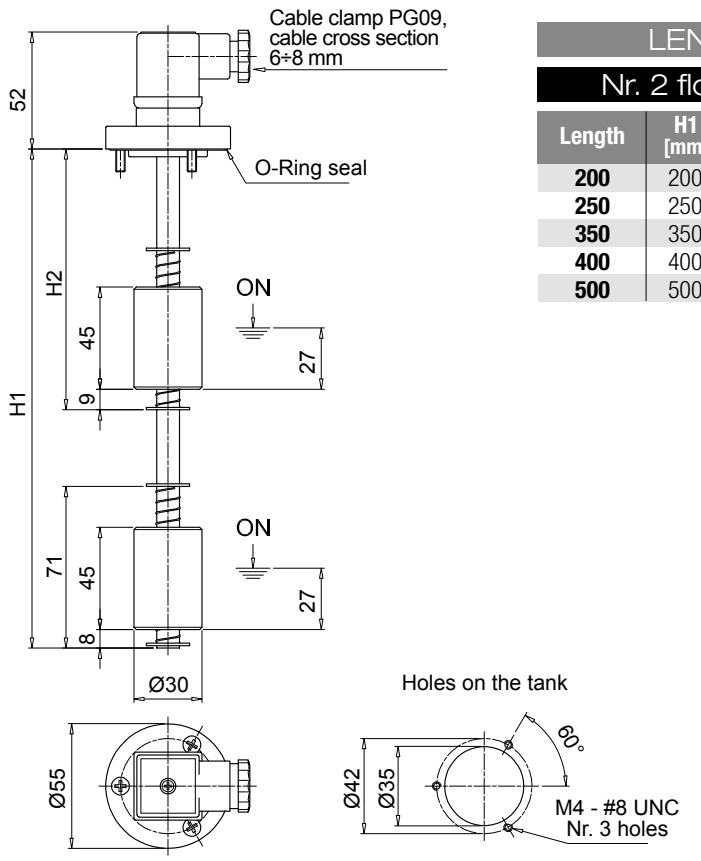

LEN

Nr. 2 floats

Length	H1 [mm]	H2 [mm]
200	200	95
250	250	105
350	350	115
400	400	115
500	500	125

Optional

DIN 43650 CONNECTOR

Materials

- Flange: aluminum
- Rod: brass
- Float: nylon foam
- Seals: A= NBR - V= FPM

Temperature

From -15 °C to +80 °C

For temperatures outside this range, contact MP Filtri Technical and Sales Department

LEG GENERAL INFORMATION

Technical data

Electrical oil level indicators

LEG is a range of electrical fluid level indicators for monitoring of the fluid level into the tank.
They are directly fitted on the tank side.
The float moves through the rod while the fluid level changes.
A magnet, fitted into the float, turns a reed sensor fixed into the rod.

Available features:
- Flanged connections
- Adjustable size on request, to meet every size of tank
- 1 float, to monitor the minimum level or the maximum level.

Common applications:
- Hydraulic systems
- Mobile machines
- Industrial equipment

Electrical symbol:

LEG 1 Float

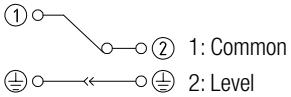

Note: to invert the contact status from NC to NO and vice versa, simply invert the float.

Materials
- Flange: Aluminium
- Tube: Brass
- Float: Nylon foam
- O-Ring: NBR
- Circlip: Phosphor bronze
- Contact: N.C. reed, N.O. (on request)

Electrical data
- Protection rating: IP65
- Max switching capacity: 80 W
- Max switching current: 1 A
- Max switching voltage: 250 Vac
- Fluid specific gravity: > 0.75

The electrical properties indicated are referred to resistive loads; for capacitive and inductive loads and incandescent lamps, use protection circuits.

Temperature
From -15 °C to + 80 °C

Weight
LEG A 102 0.19 kg
LEG A 200 0.22 kg

Designation & Ordering code

LEG

Configuration example : LEG | A | 200 | 1 | A | 1 | A | F | S | P01

Series
LEG

Tube material
A Brass

Length
102 | **200**

Number of floats
1 Nr. 1 float

Float material
A Nylon foam

Electrical switch
1 N.C. (Normally Closed)

Seals
A NBR

Connection to the tank
F Nr. 3 holes flange

Electrical connection
S DIN 43650 connector

Execution
P01 MP Filtri standard
Pxx Customized

LEG	
Size	**H1 [mm]**
LEG 102	103
LEG 200	200

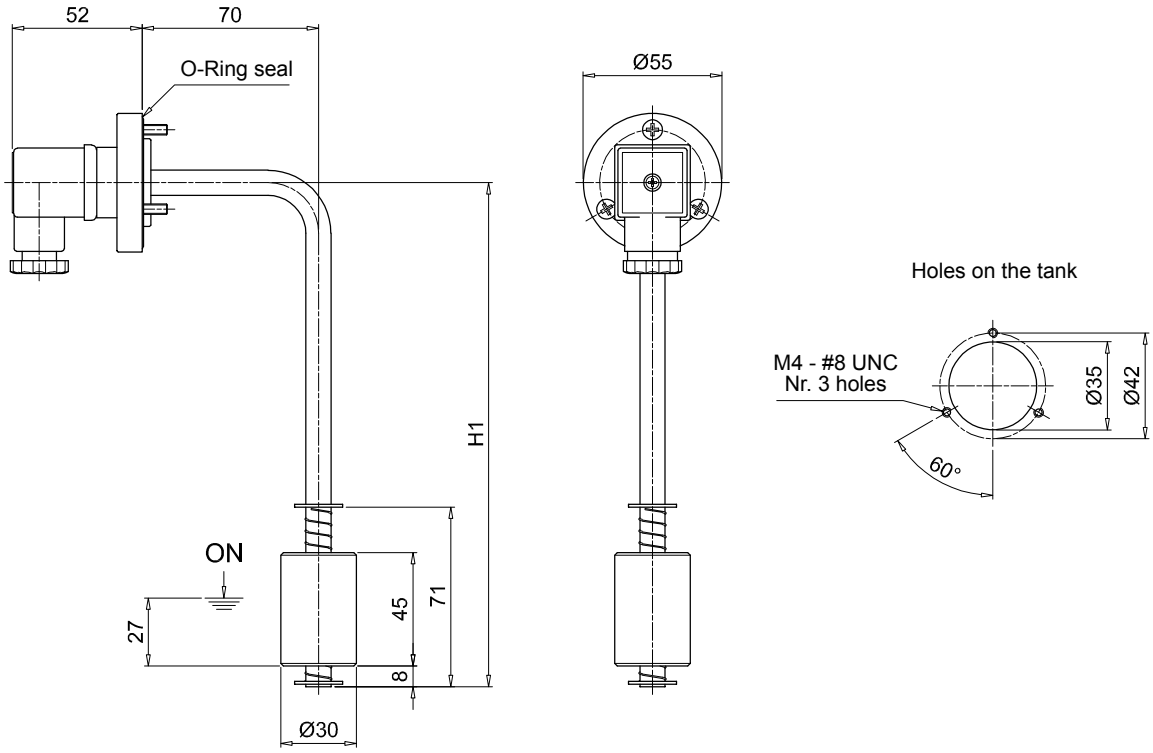

Optional

DIN 43650 CONNECTOR

Materials
- Flange: aluminum
- Rod: brass
- Float: nylon foam
- Seals: A= NBR - V= FPM

Temperature
From -15 °C to +80 °C

For temperatures outside this range, contact MP Filtri Technical and Sales Department

Note: for installation onto OB Cleaning covers see page 147

LET GENERAL INFORMATION

Technical data

Electrical oil level indicators

LET is a range of electrical fluid level indicators for monitoring of the fluid level into the tank. They are directly fitted on the tank.
The float moves through the rod while the fluid level changes.
A magnet, fitted into the float, turns a reed sensor fixed into the rod.
The integrated thermostat allows to get a remote monitoring of the temperature.

Available features:
- G 1" male threaded or flanged connections
- Adjustable size on request, to meet every size of tank
- 1 float, to monitor the minimum level or the maximum level.

Common applications:
- Hydraulic systems
- Mobile machines
- Industrial equipment

Electrical symbol:

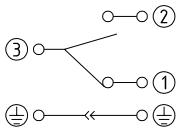

Note: to invert the contact status from NC to NO and vice versa, simply invert the float.

Materials
- Flange/Threaded body: Aluminium
- Tube: Brass, AISI 304 (on request)
- Float: Nylon foam, AISI 316 (on request)
- O-Ring: NBR
- Circlip: Phosphor bronze
- Contact: N.C. reed, N.O. (on request)

Electrical data
- Protection rating: IP65
- Max switching capacity: 80 W
- Max switching current: 1 A
- Max switching voltage: 250 Vac
- Fluid specific gravity: > 0.75

Temperature
From -15 °C to + 80 °C

Weight

LET A 200	0.20 kg
LET A 300	0.23 kg
LET A 400	0.28 kg

Designation & Ordering code

LET

Configuration example : LET | A | 300 | 1 | A | 1 | A | F | S | 50 | P01

Series
LET

Tube material
A Brass

Length
200 | **300** | **400**

Number of floats
1 Nr. 1 float

Float material
A Nylon foam

Electrical switch
1 N.C. (Normally Closed)

Seals
A NBR

Connections to the tank
G Thread G 1"
F Nr. 3 holes flange

Electrical connection
S DIN 43650 connector

Thermostat setting
50 50°C N.O. (Normally Open)

Execution
P01 MP Filtri standard
Pxx Customized

LET	
Length	**H1 [mm]**
200	200
300	300
400	400

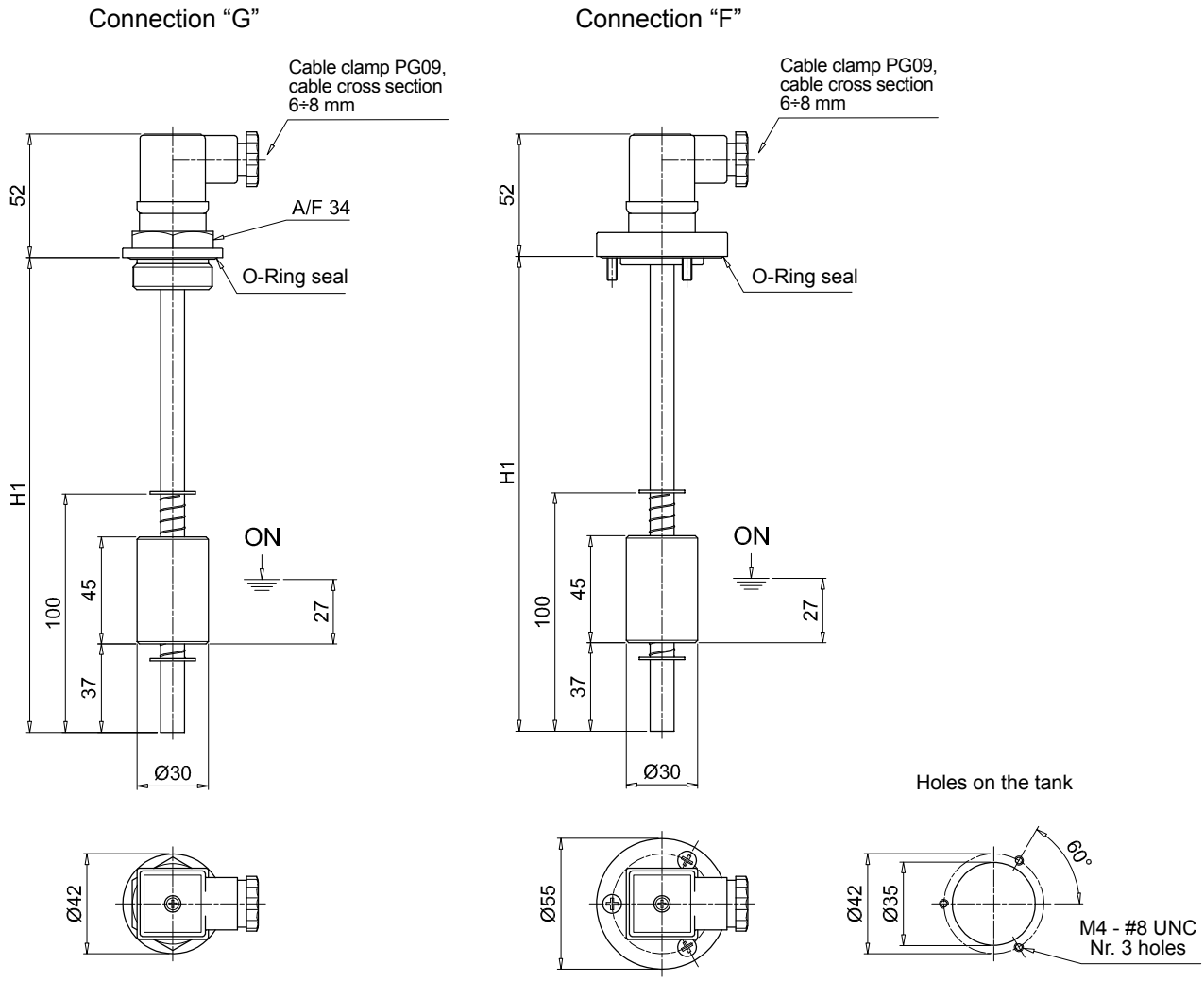

Optional

DIN 43650 CONNECTOR

Materials
- Flange: aluminum
- Rod: brass
- Float: nylon foam
- Seals: A= NBR - V= FPM

Temperature
From -15 °C to +80 °C

For temperatures outside this range, contact MP Filtri Technical and Sales Department

LEM GENERAL INFORMATION

Technical data

Electrical oil level indicators

LEM is a range of electrical fluid level indicators for monitoring of the fluid level into the tank. They are directly fitted on the tank.
The float moves through the rod while the fluid level changes.
A magnet, fitted into the float, turns a reed sensor fixed into the rod.
The setting point is adjustable on site, with few easy actions.

Available features:
- Flanged connections
- Adjustable size on request, to meet every size of tank
- 1 float, to monitor the minimum level or the maximum level
- Integrated thermostat, to get a remote monitoring of the temperature.

Common applications:
- Hydraulic systems
- Mobile machines
- Industrial equipment

Electrical symbol:

LEM 1 Float

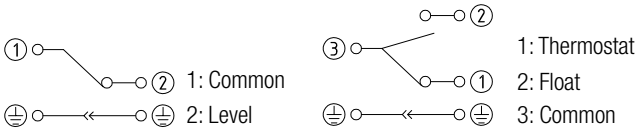

Note: to invert the contact status from NC to NO and vice versa, simply invert the float.

Materials
- Flange/Threaded body: Aluminium
- Tube: Brass
- Float: Nylon foam
- O-Ring: NBR
- Circlip: Phosphor bronze
- Float contact: N.C. reed, N.O. (on request)
- Thermostat contact: N.O., N.C. (on request)

Electrical data
- Protection rating: IP65
- Max switching capacity: 80 W
- Max switching current: 1 A
- Max switching voltage: 250 Vac
- Fluid specific gravity: > 0.75

Temperature
From -15 °C to + 80 °C

Weight
LEM 0.406 kg

Designation & Ordering code

LEM

Configuration example : LEM | A | 1000 | 1 | A | 1 | A | F | S | 60 | P01

Series
LEM

Tube material
A Brass

Length
500 | **1000**

Number of floats
1 Nr. 1 float

Float material
A Nylon foam

Electrical switch
1 N.C. (Normally Closed)

Seals
A NBR

Connections to the tank
F Nr. 3 holes flange

Electrical connection
S DIN 43650 connector

Thermostat setting
00 Without thermostat
60 60°C N.O. (Normally Open)

Execution
P01 MP Filtri standard
Pxx Customized

LEM	
Length	**H1 [mm]**
500	500
1000	1000

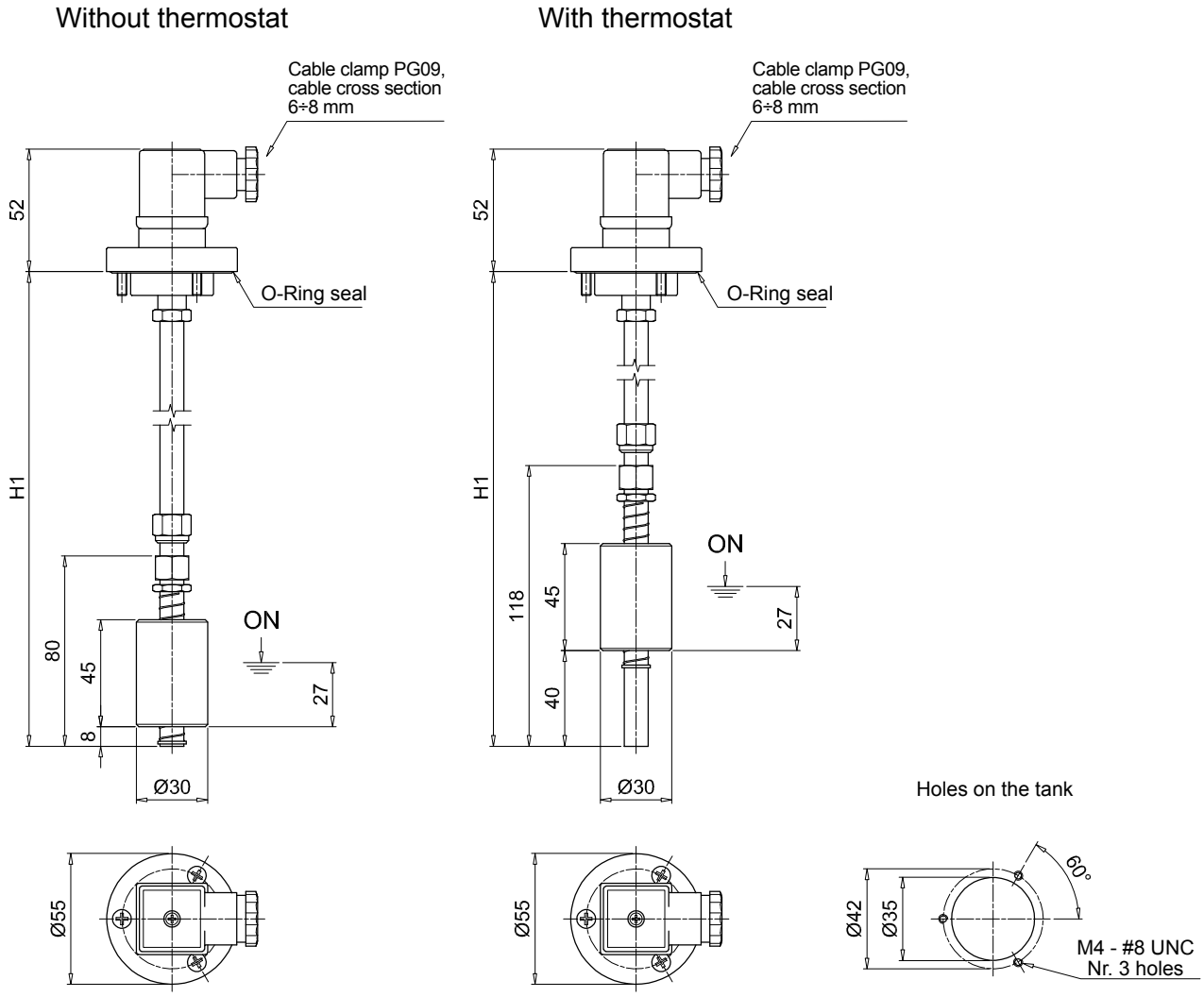

Optional

DIN 43650 CONNECTOR

Materials
- Flange: aluminum
- Rod: brass
- Float: nylon foam
- Seals: A= NBR - V= FPM

Temperature
From -15 °C to +80 °C

For temperatures outside this range, contact MP Filtri Technical and Sales Department

LEU GENERAL INFORMATION

Technical data

Electrical oil level indicators

LEU is a range of electrical fluid level indicators for monitoring of the fluid level into the tank. They are directly fitted on the tank.
The float moves through the rod while the fluid level changes.
A magnet, fitted into the float, turns a reed sensor fixed into the rod.
The setting point is adjustable on site, with few easy actions.
They are made of stainless steel, to meet every heavy duty application.

Available features:
- Flanged connections
- Adjustable size on request, to meet every size of tank
- 2 floats, to monitor both the minimum level and the maximum level.

Common applications:
- Hydraulic systems
- Mobile machines
- Industrial equipment

Electrical symbol:

LEU 2 Floats

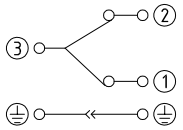

Note: to invert the contact status from NC to NO and vice versa, simply invert the float.

Materials
- Flange: Aluminium
- Tube: AISI 304
- Float: Hard rubber, AISI 316 (on request)
- O-Ring: NBR
- Circlip: AISI 304
- Float contact: N.C. reed, N.O. (on request)

Electrical data
- Protection rating: IP65
- Max switching capacity: 50 W
- Max switching current: 0.5 A
- Max switching voltage: 250 Vac
- Fluid specific gravity: > 0.75

Temperature

From -15 °C to + 80 °C

Weight

LEU 1 float	0.310 kg
LEU 2 floats	0.415 kg

Designation & Ordering code

LEU

Configuration example : LEU | B | 2 | B | 1 | A | F | S | P01

Series
LEU

Tube material
B AISI 304

Number of floats
2 Nr. 2 floats

Float material
B NBR

Electrical switch
1 N.C. (Normally Closed)

Seals
A NBR

Connections to the tank
F Nr. 3 holes flange

Electrical connection
S DIN 43650 connector

Execution
P01 MP Filtri standard
Pxx Customized

LEU

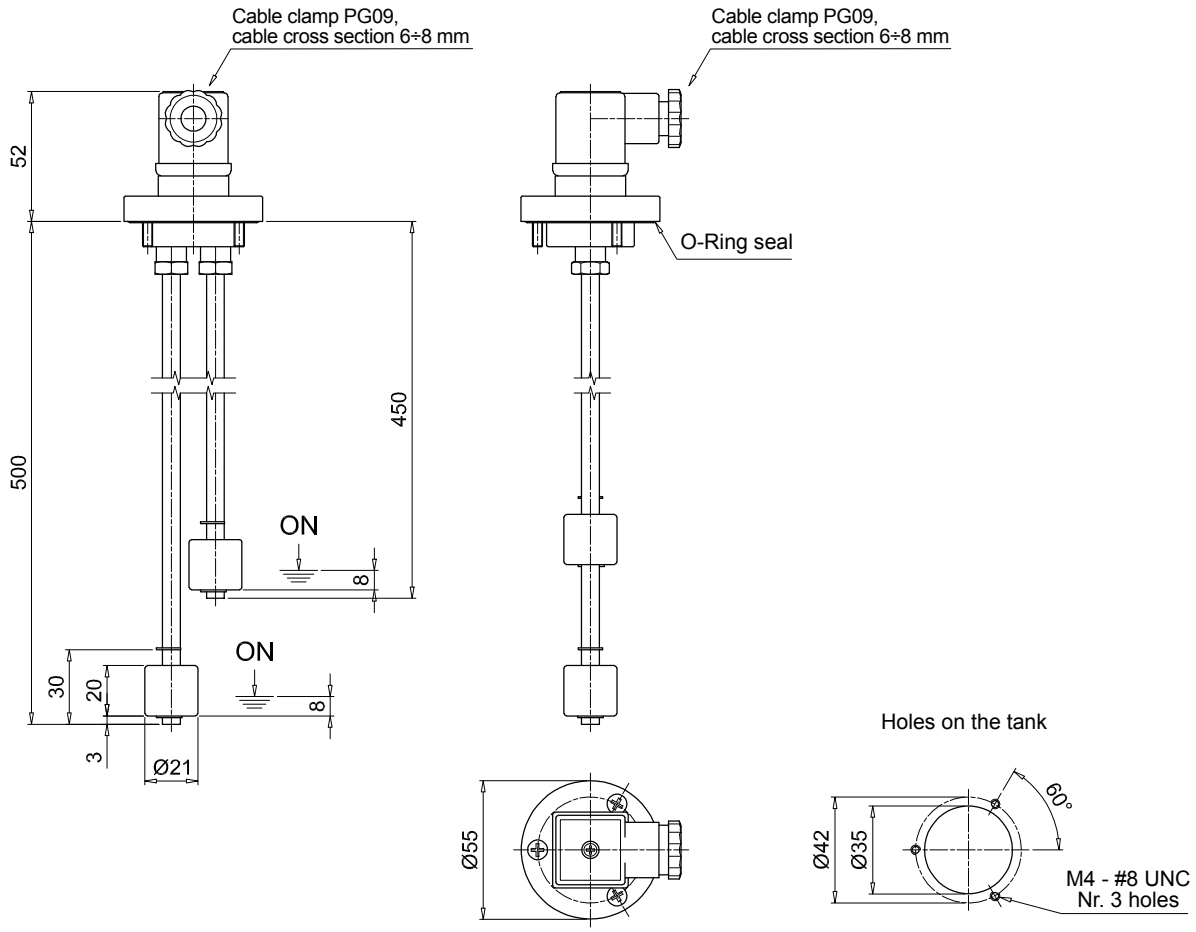

Optional

DIN 43650 CONNECTOR

Materials
- Flange: aluminum
- Rod: brass
- Float: nylon foam
- Seals: A= NBR - V= FPM

Temperature
From -15 °C to +80 °C

For temperatures outside this range, contact MP Filtri Technical and Sales Department

LVK series

Electrical and visual oil level indicator

LVK GENERAL INFORMATION

Technical data

Electrical and visual oil level indicators

LVK is a range of electrical and visual fluid level indicators for monitoring of the fluid level into the tank. They are directly fitted on the tank side. The float moves through the indicator housing while the fluid level changes.
A magnet, fitted into the float, turns a reed sensor fixed into the housing.

Available features:
- Several male threaded connections
- Three different sizes, to meet every size of tank
- Thermometer, thermostat or PT100, to check the temperature of the fluid

Common applications:
- Hydraulic systems
- Mobile machines
- Industrial equipment

Electrical symbol:
see page. 118

Materials
- Head: Polyamide
- Screws: Nickel plated brass (standard), Aisi 314 (optional)
- Seal: NBR (standard), FPM (optional)
- Float: Polyamide
- Sensor thermometer: Screw + thermometer

Temperature
From -20 °C to + 80 °C

Weight
LVK 10 0.140 kg
LVK 20 0.170 kg
LVK 30 0.250 kg

Quantity
25 pcs/pack

Designation & Ordering code

LVK

Configuration example : LVK | 20 | A | M12 | 1 | T | 5 | P01

Series
LVK

Length
10 | **20** | **30**

Seals
A NBR

Connections
M10 Screws M10 **M12** Screws M12

Electrical switch in absence of fluid
1 N.O. (Normally Open)
2 N.C. (Normally Closed)
3 SPDT (single-pole, double throw)

Version		Connection M10	Connection M12
S	Standard	•	•
T	With thermostat		•
P	With PT100 sensor		•

Thermostat setting		Version S	Version T	Version P
S	Standard (no setting)	•		•
1	50°C N.O. (Normally Open)		•	
2	60°C N.O. (Normally Open)		•	
3	70°C N.O. (Normally Open)		•	
5	50°C N.C. (Normally Closed)		•	
6	60°C N.C. (Normally Closed)		•	
7	70°C N.C. (Normally Closed)		•	

Execution
P01 MP Filtri standard
Pxx Customized

LVK		
Size	**H [mm]**	**l [mm]**
10	108	76
20	159	127
30	286	254

Connection	**D [mm]**	**ØR [mm]**
M10	M10	10.5
M12	M12	12.5

Without thermostat

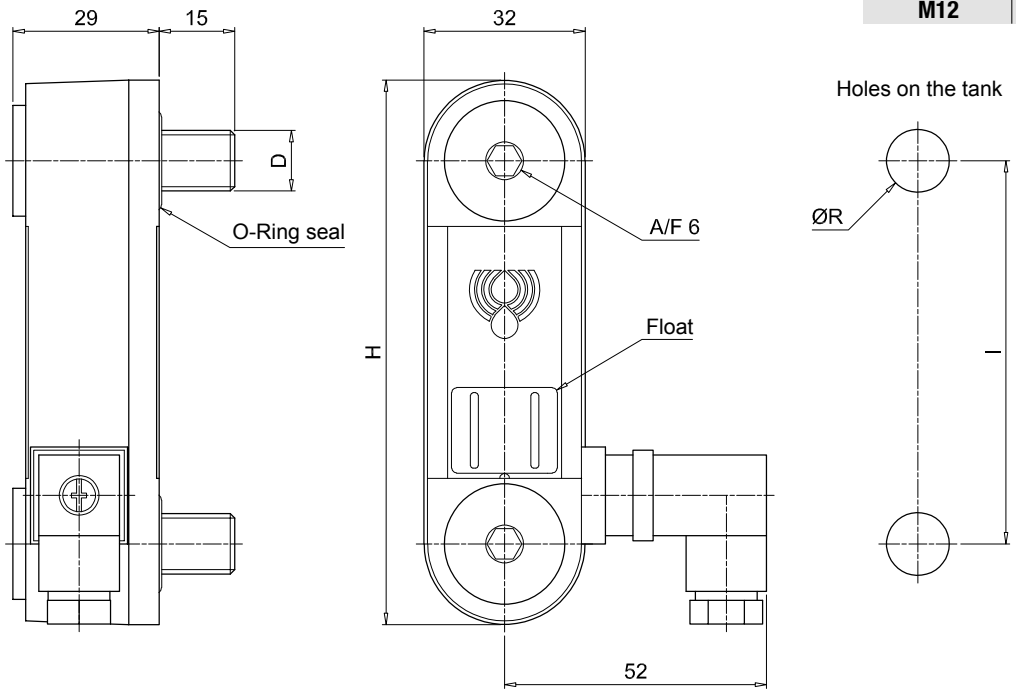

With thermostat

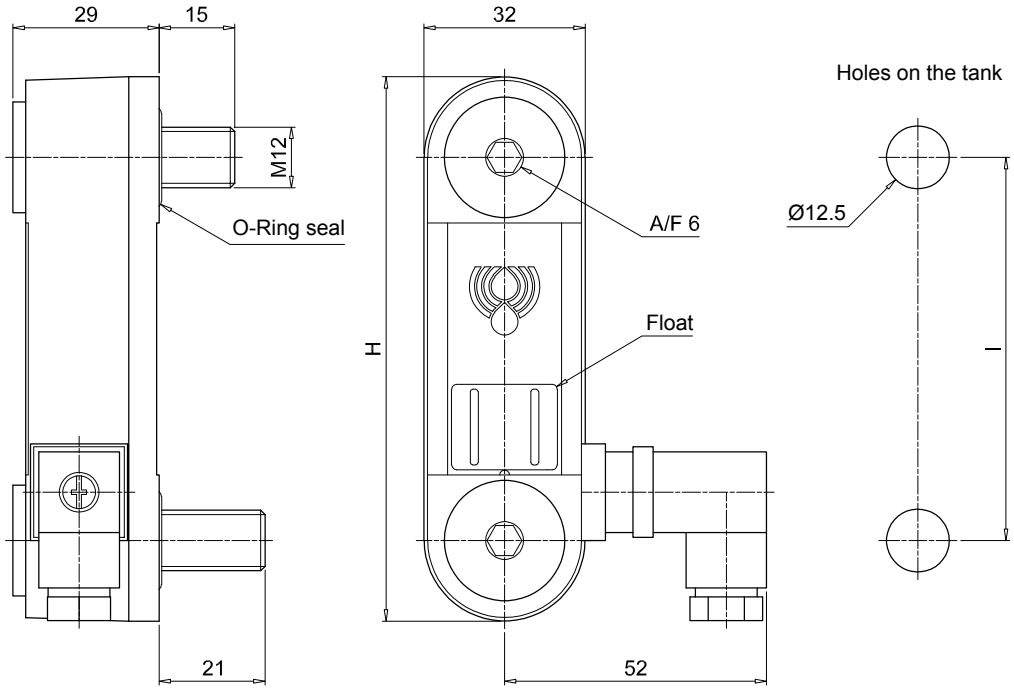

Electrical symbols

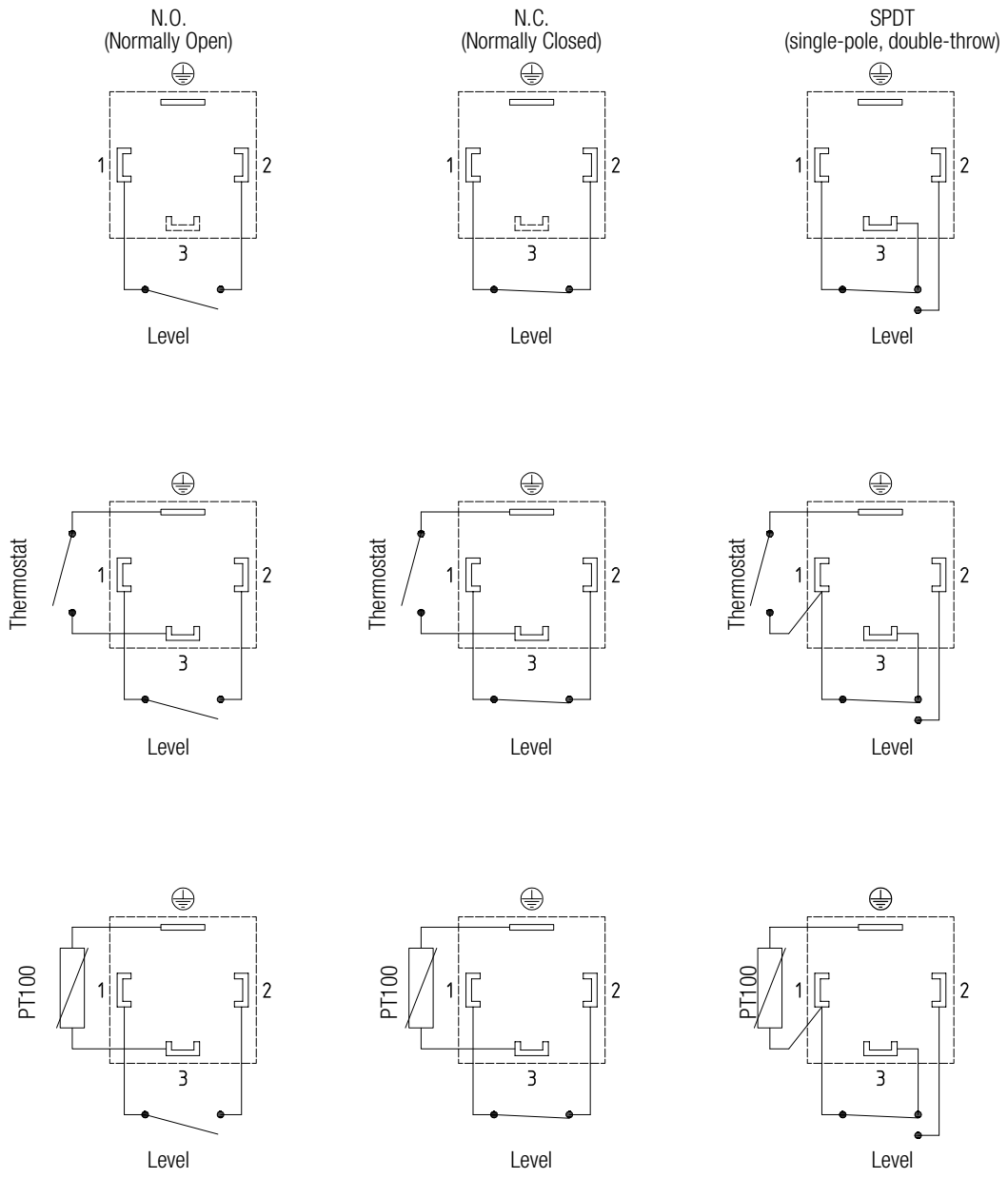

EM1 & SVM gauge isolator valves are designed to protect pressure gauges from pressure shocks when the pressure reading is not required.

FTA/FTR flanges make it possible to fix suction and return lines on the reservoir cover.

MULTIFLEX fixing clamps make it possible to install various pipelines of different types and diameters, rapidly, easily, and, more importantly, economically.

CLEANING COVERS, facilitating the maintenance of oil tanks in hydraulic power units, without necessarily having to dismantle the unit.

ALUMINIUM TANKS of 10 litres capacity, allowing the assembly of a compact hydraulic power unit.

Accessories

EM1	page 123
SVM	129
FTA - FTR	133
SFT	137
OB	143
SE10LT	149

EM1 series

Gauge isolator valves

EM1 GENERAL INFORMATION

Technical data

Gauge isolator valves

Gauge isolator valves are designed to protect pressure gauges from pressure shocks when the pressure reading is not required; after each reading setting the selector to the closed position serves to depressurise the pressure gauge by means of the T fitting connected to the reservoir.

3 and 6-way pressure gauge selectors perform the same function as the gauge isolator valves, allowing pressure values from different parts of the system to be read using a single pressure gauge.

Working instructions:
- Button not pressed: pressure gauge isolated
- Button pressed: pressure gauge reading
- Button pressed and turned (either to left or right): button remains in position and pressure gauge measures pressure continuously.
- To isolate the pressure gauge from pressure reading, turn the button until it returns to the not pressed position.

Materials A-B
- Body: Cast iron
- Pin: Steel
- Seals: NBR, FPM
- Knob/cover: Nylon
- Stop ring: Steel
- Spring: Steel
- Nameplate: Aluminium
- Nut-screw: Galvanized steel

Materials C
- Body: Cast iron
- Pin: Steel
- Seals: NBR, FPM
- Knob/cover: Nylon
- Stop ring: Steel
- Spring: Steel
- Nameplate: Aluminium
- Nut-screw: Galvanized steel
- Plug: Anodized steel

Operating pressure
400 bar

Operating temperature
From -25 °C to + 100 °C

Weight

EM1 version A	0.41 kg
EM1 version B	0.44 kg
EM1 version C	1.00 kg

Quantity
25 pcs/pack

Designation & Ordering code

EM1

Configuration example : EM1 | A | G2 | A | P01

Series and size

EM1

Version

A	Threaded connections, panel mount with hex nut
B	Threaded connections, panel mount with screws
C	Manifold/threaded connections, panel mount with screws

Connection

G1	G 1/4”
G2	1/4” NPT
G3	SAE 5 - 1/2” - 20 UNF

Seals

A	NBR
V	FPM

Execution

P01	MP Filtri standard
Pxx	Customized

EM1
version A

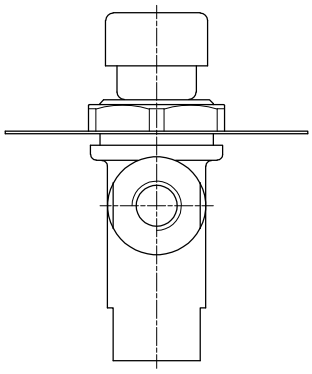

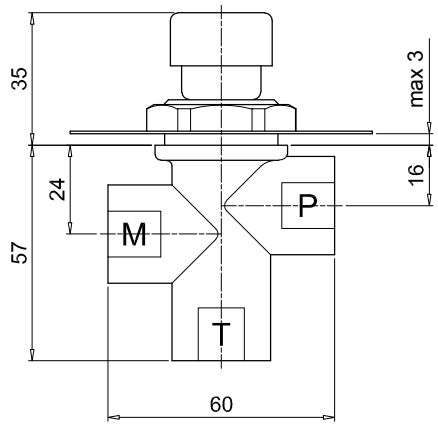

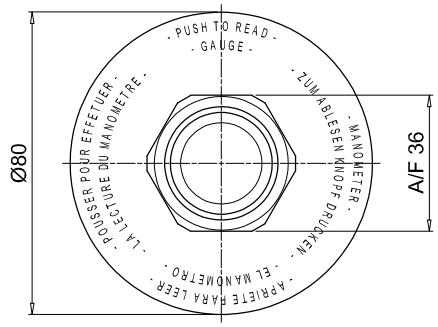

Holes on the panel

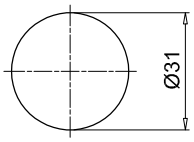

EM1
version B

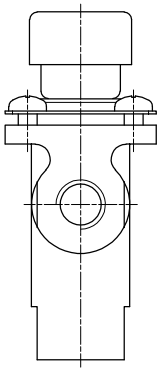

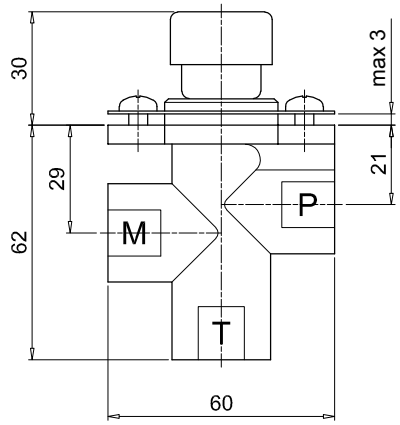

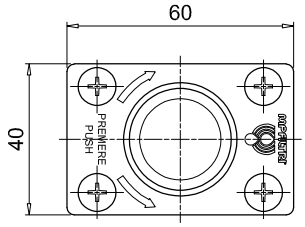

Holes on the panel

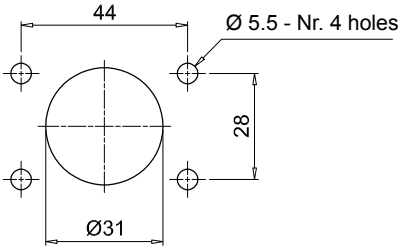

Dimensions

EM1

version C

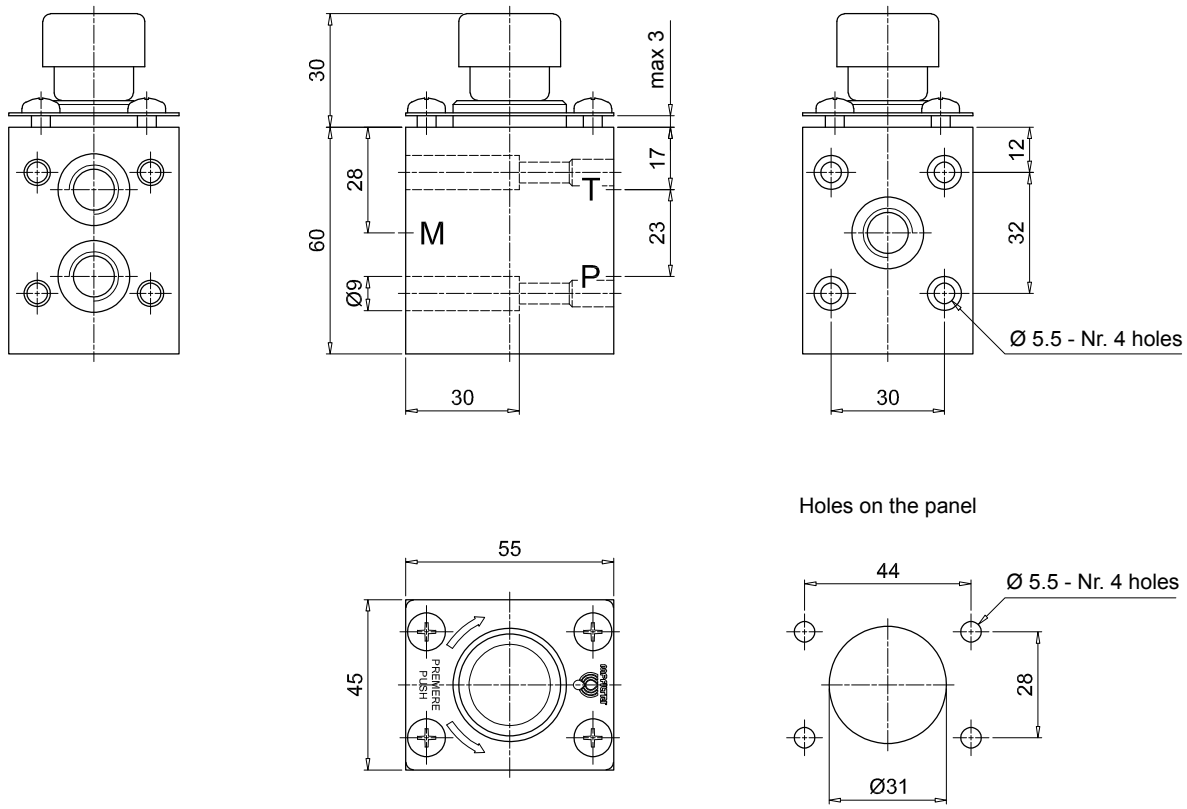

SVM series

Gauge isolator valves

SVM GENERAL INFORMATION

Technical data

Gauge isolator valves

Gauge isolator valves are designed to protect pressure gauges from pressure shocks when the pressure reading is not required; after each reading setting the selector to the closed position serves to depressurise the pressure gauge by means of the T fitting connected to the reservoir.

3 and 6-way pressure gauge selectors perform the same function as the gauge isolator valves, allowing pressure values from different parts of the system to be read using a single pressure gauge.

Working instructions:
- Knob not pressed: pressure gauge isolated
- Knob pressed: pressure gauge reading
- Knob pressed and turned: the knob remains in position and pressure gauge measures pressure continuously.
- To isolate the pressure gauge from pressure reading, turn the button until it returns to the not pressed position.

Materials
- Body: Cast iron
- Pin: Steel
- Seals: NBR, FPM
- Cover: Anodized aluminium
- Flange: Anodized aluminium
- Knob: Nylon
- Ringnut: Nylon
- Nut-screw: Galvanized steel, Phosphatized steel
- Pin: Steel

Operating temperature
From -25 °C to + 100 °C

Weight
SVM length 3 1.547 kg
SVM length 6 1.507 kg

Quantity
25 pcs/pack

Designation & Ordering code

SVM

Configuration example : SVM | 3 | G1 | A | P01

Series and size
SVM

Version
3 Nr. 3 pressure ports
6 Nr. 6 pressure ports

Connection
G1 G 1/4”
G2 1/4” NPT
G3 SAE 5 - 1/2” - 20 UNF

Seals
A NBR
V FPM

Execution
P01 MP Filtri standard
Pxx Customized

SVM
version 3

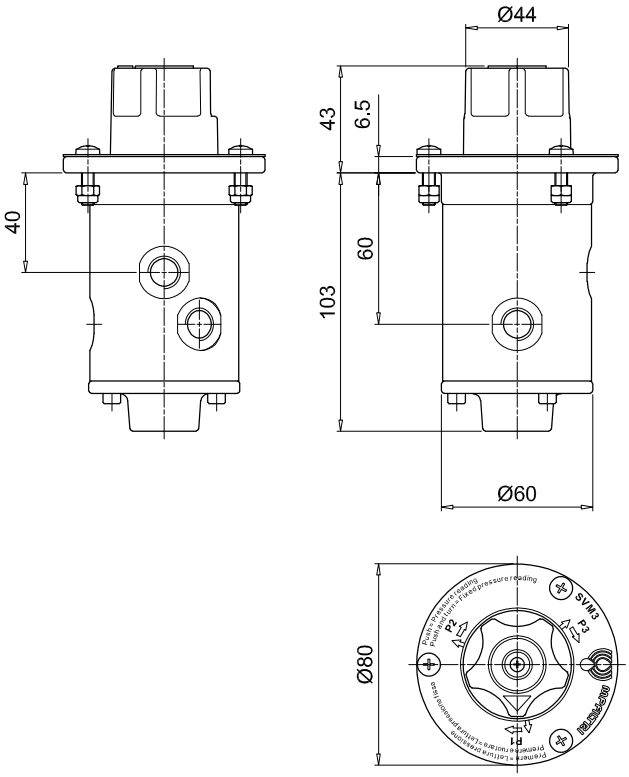

SVM
version 6

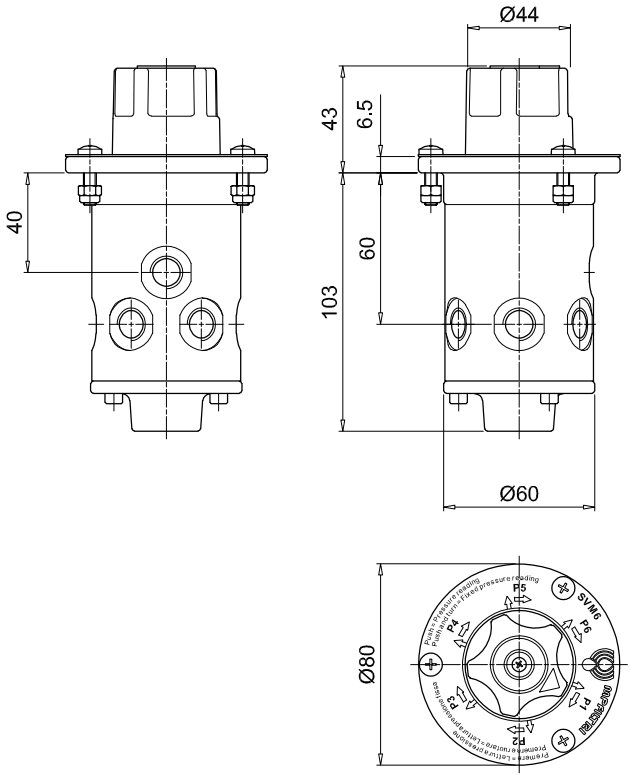

External mount

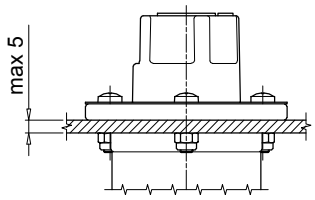

Internal mount

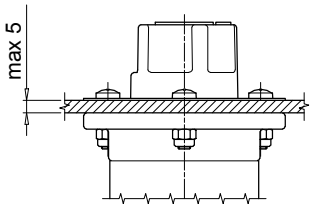

Holes on the panel

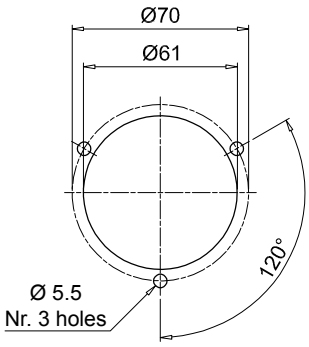

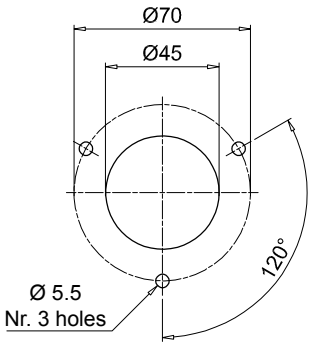

FTA -FTR series

Oil tank fixing flange

FTA - FTR GENERAL INFORMATION

Technical data

Oil tank fixing flange

FT flanges make it possible to fix suction and return lines on the reservoir cover.
Fitting a flexible insert allows separation of pipes.
Both rigid pipes and flexible hoses can be separated from the reservoir walls, absorbing vibration and reducing plant noise emissions.

Operating pressure
400 bar

Operating temperature
From -25 °C to + 100 °C

Materials
- Flange: Galvanized steel
- Flange seal: Inorganic fibre
- Tube seal: NBR
- Screw: Galvanized steel

Weight FTA

FTA 1215	0.590 kg
FTA 1620	0.570 kg
FTA 2225	0.550 kg
FTA 2630	0.530 kg
FTA 3235	0.500 kg
FTA 3842	0.520 kg
FTA 4850	0.920 kg
FTA 6061	0.900 kg
FTA 7577	0.860 kg
FTA 8789	0.830 kg

Weight FTR

FTR 0610	0.450 kg
FTR 1215	0.430 kg
FTR 1620	0.400 kg
FTR 2225	0.100 kg
FTR 2630	0.103 kg
FTR 3235	0.980 kg
FTR 3842	0.950 kg
FTR 4850	0.900 kg
FTR 6061	0.850 kg

Quantity
25 pcs/pack

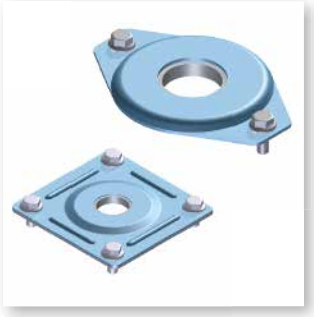

Designation & Ordering code

FTA - FTR

Configuration example : FTA 2630 G A P01

Series

FTA	FTR

Size		FTA	FTR
0610	Pipe Ø06 ÷ 10 mm		•
1215	Pipe Ø12 ÷ 15 mm	•	•
1620	Pipe Ø16 ÷ 20 mm	•	•
2225	Pipe Ø22 ÷ 25 mm	•	•
2630	Pipe Ø26 ÷ 30 mm	•	•
3235	Pipe Ø32 ÷ 35 mm	•	•
3842	Pipe Ø38 ÷ 42 mm	•	•
4850	Pipe Ø48 ÷ 50 mm	•	•
6061	Pipe Ø60 ÷ 61 mm	•	•
7577	Pipe Ø75 ÷ 77 mm	•	
8789	Pipe Ø87 ÷ 89 mm	•	

Flange seals		FTA	FTR
G	Inorganic fiber	•	
0	Without seal		•

Pipe seals	
A	NBR

Execution	
P01	MP Filtri standard
Pxx	Customized

FTA

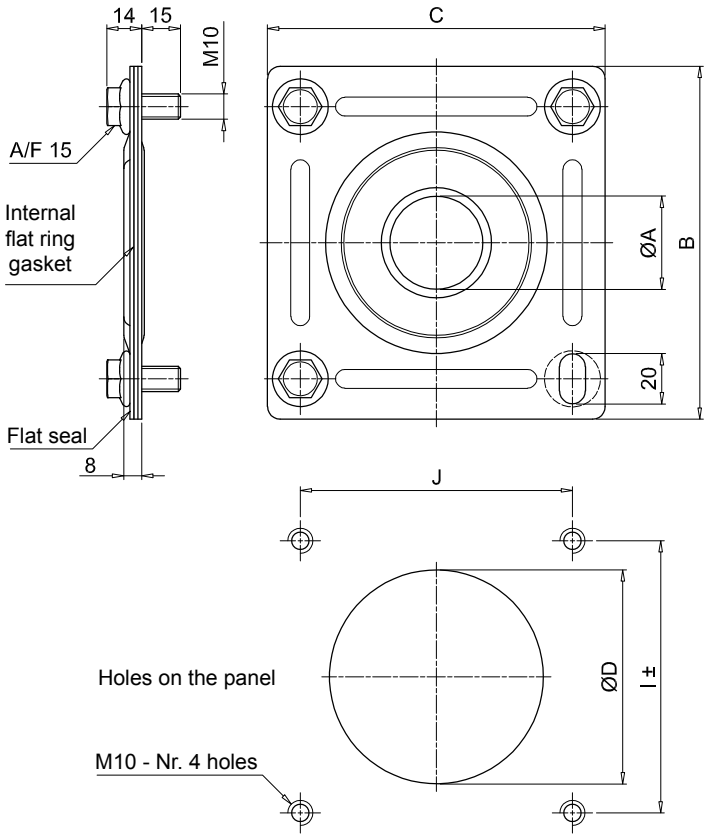

Size	ØA [mm] min	ØA [mm] max	B [mm]	C [mm]	ØD [mm]	I [mm]	J [mm]
1215	12	15	140	134	85	108±1	108
1620	16	20					
2225	22	25					
2630	26	30					
3235	32	35					
3842	38	42					
4850	48	50	190	184	130	159±4	159
6061	60	61					
7577	75	77					
8789	87	89					

FTR

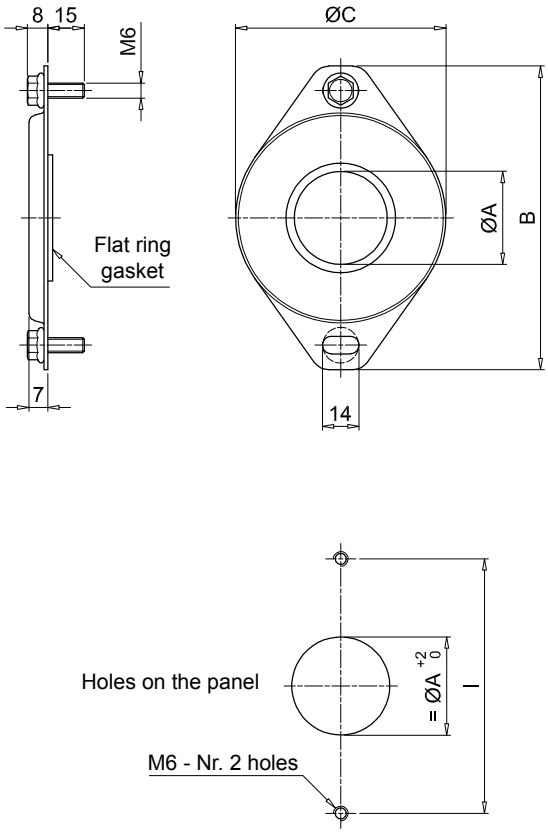

Size	ØA [mm] min	ØA [mm] max	B [mm]	ØC [mm]	I [mm]
0610	6	10	71	40	54
1215	12	15			
1620	16	20			
2225	22	25	121	84	102
2630	26	30			
3235	32	35			
3842	38	42			
4850	48	50			
6061	60	61			

SFT series

Fixing clamps

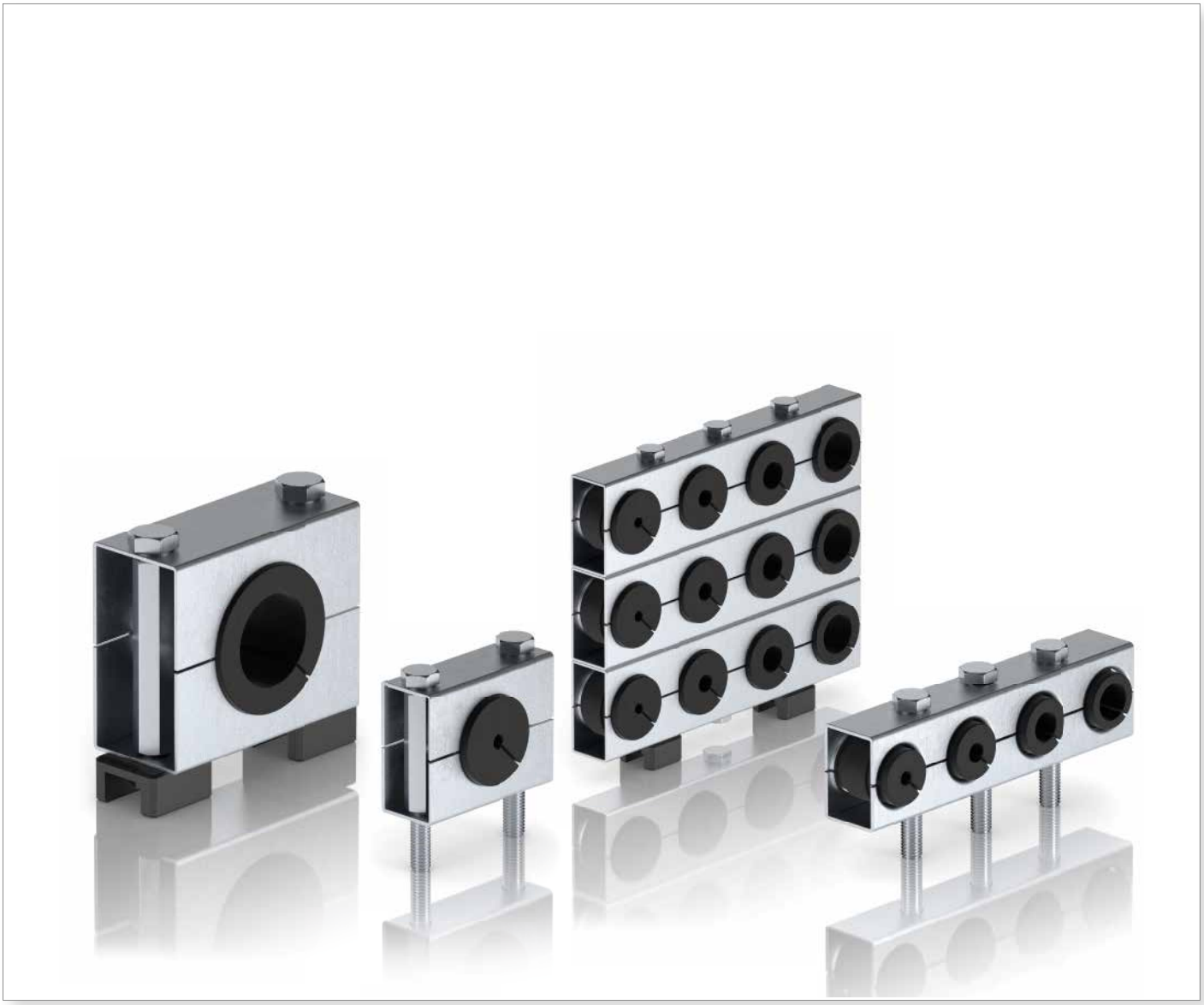

Technical data

Fixing clamps

MULTIFIX fixing clamps are particularly suitable when a series of pipelines must be installed requiring neat and high precision installation. These brackets make it possible to install various pipelines of different types and diameters, rapidly, easily, and, more importantly, economically.

MULTIFIX clamps support, guide, and absorb impact and vibration, protecting the pipes and dispensing with the need for complex and unsightly mounting systems with angle
clamps etc.

An orderly layout facilitates maintenance resulting in significant savings in running costs; it also allows intuitive visual design of the plant, which can be assembled easily even without specialised labour.

Materials
- Pair of brackets: Galvanized steel
- Bush: NBR
- Spacer: Steel
- Studs: Steel
- Screws: Steel
- Foot and screw: Steel

Weight

SFT 38 1	0.050 kg
SFT 51 1	0.100 kg
SFT 78 1	0.570 kg

Operating temperature
From -25 °C to + 100 °C

Quantity
25 pcs/pack

Designation & Ordering code

SFT

Configuration example : SFT | 51 | 19 | P01

Series

SFT	Pair of brackets

Size

38	Height 38 mm - 1 1/2”
51	Height 51 mm - 2”
78	Height 78 mm - 3”

Number of pipe		38	51	78
1	Single pipe	•	•	•
16	Nr. 16 pipes			•
19	Nr. 19 pipes		•	
26	Nr. 26 pipes	•		

Execution

P01	MP Filtri standard
Pxx	Customized

SFT

Single pipe

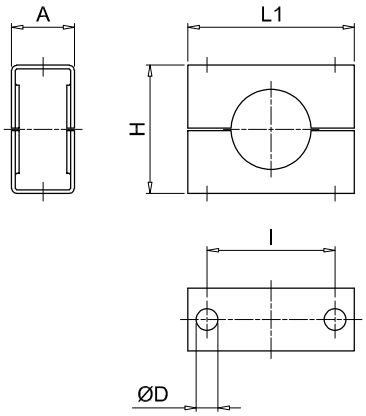

SFT

Multiple pipe

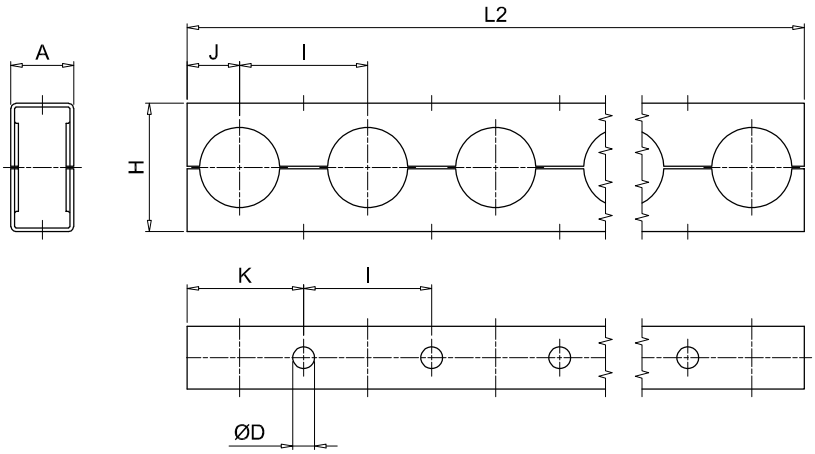

Size	A [mm]	ØD [mm]	H [mm]	I [mm]	J [mm]	K [mm]	L1 [mm]	L2 [mm]
38	25	8.7	38	38.1	15	34	56	982
51	25	8.7	51	50.8	21	46	66	956
78	41	11.1	78	76.2	35	73	95	1213

SFT MULTIFIX

Assembly

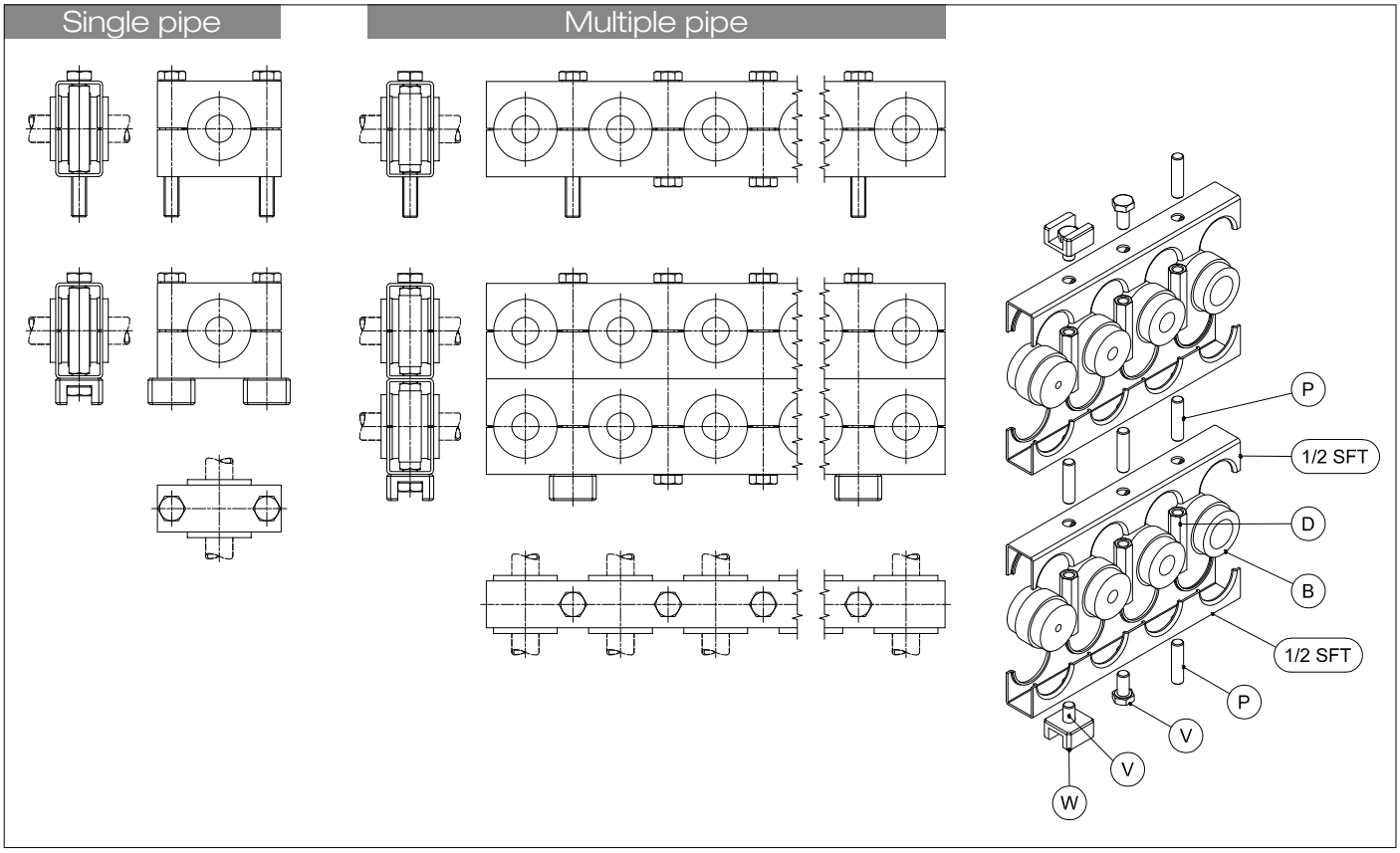

Designation & Ordering code

RUBBER BUSH

B

Configuration example : B 51 1820

Series

B	Rubber bush

Size

38
51
78

Pipe diameter		38	51	78
6	Pipe Ø6 mm	•	•	
8	Pipe Ø8 mm	•	•	•
10	Pipe Ø10 mm - 1/8”	•	•	•
1214	Pipe Ø12 ÷ 14 mm - 1/4”	•	•	•
1516	Pipe Ø15 ÷ 16 mm - 3/8”	•	•	•
1820	Pipe Ø18 ÷ 20 mm - 1/2”	•	•	•
22	Pipe Ø22 mm - 5/8”		•	•
25	Pipe Ø25 mm - 3/4”		•	•
28	Pipe Ø28 mm		•	
2830	Pipe Ø28 ÷ 30 mm - 7/8”			•
33	Pipe Ø33 mm - 1”			•
3538	Pipe Ø35 ÷ 38 mm - 1 1/8”			•
42	Pipe Ø42 mm - 1 1/4”			•
50	Pipe Ø50 mm			•

Dimensions

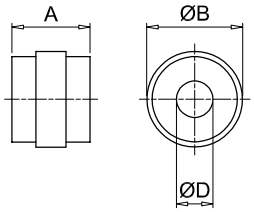

Size	A [mm]	ØB [mm]
38	31	25
51	31	38
78	45	59

Pipe	ØD [mm]	Ø nom. pipe [inch]
6	6	-
8	8	-
10	10	1/8”
1214	12÷14	1/4”
1516	15÷16	3/8”
1820	18÷20	1/2”
22	22	5/8”
25	25	3/4”
28	28	-
2830	28÷30	7/8”
33	33	1”
3538	35÷38	1 1/8”
42	42	1 1/4”
50	50	-

Designation & Ordering code

Dimensions

HEXAGON CONNECTION NUT (D)

Configuration example : D | 51 | M

Series

D Hexagon connection nut

Size

38
51
78

Screws

M Metric
U UNC

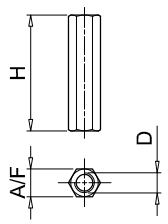

Size	Screws [mm]	D [mm]	H [mm]	A/F [mm]
38	M	M8	33	11
	U	5/16" UNC		
51	M	M8	46	11
	U	5/16" UNC		
78	M	M10	72	13
	U	3/8" UNC		

STUD BOLT (P)

Configuration example : P | 3851 | M

Series

P Stud bolt

Size	SFT 38	SFT 51	SFT 78
3851	•	•	
78			•

Screws

M Metric
U UNC

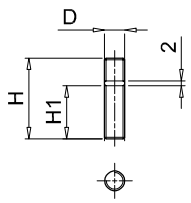

Size	Screws [mm]	D [mm]	H [mm]	H1 [mm]
38 - 51	M	M8	32	21
	U	5/16" UNC		
78	M	M10	38	22
	U	3/8" UNC		

HEXAGON HEAD SCREW (V)

Configuration example : V | 3851 | M

Series

V Hexagon head screw

Size	SFT 38	SFT 51	SFT 78
3851	•	•	
78			•

Screws

M Metric
U UNC

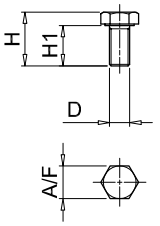

Size	Screws [mm]	D [mm]	H [mm]	H1 [mm]	A/F [mm]
38 - 51	M	M8	21	16	13
	U	5/16" UNC			
78	M	M10	36	30	17
	U	3/8" UNC			

WELDING FOOT (W)

Configuration example : W | 3851

Series

W Welding foot

Size	SFT 38	SFT 51	SFT 78
3851	•	•	
78			•

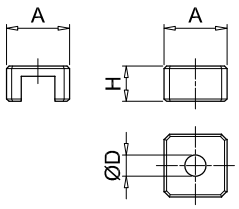

Size	H [mm]	ØD [mm]	H [mm]
38 - 51	25	8.5	14
78	32	11	16

OB series

Cleaning covers

Technical data

Cleaning covers

The pressure die-cast aluminium alloy cleaning covers offer superior mechanical strength and are manufactured to DIN 24339 standard. They provide easy access to the inside of the oil tank for inspection and cleaning purposes, without necessarily having to dismantle the unit. On request and also for small quantities inspection doors can be supplied with:
- customer logo
- hole cut for visual level indicator
- hole cut for visual and electrical level indicator
- oil sample plug

Compatibility with fluids
- Mineral oils types HH-LL-HM-HR-HV-HC, to ISO 6743/4 standard
- Water based emulsions types HFAE-HFAS, to ISO 6743/4 standard
- Water glycol type HFC, to ISO 6743/4 standard: ask for anodized version

OB275 and OB400 cleaning covers are designed according to DIN 24339.

Materials
- Cleaning covers: Pressure die-cast aluminium alloy
- Seal: NBR 70 Shore A

Weight	with seal	without seal
OB275	2.06 kg	1.76 kg
OB350	2.10 kg	1.80 kg
OB356	2.10 kg	1.80 kg
OB400	3.20 kg	2.90 kg
OB475	3.70 kg	3.40 kg

Operating temperature
From -30 °C to +80 °C

Designation & Ordering code

OB
Size
OB275
OB350
OB356
OB400
OB475

Available customization

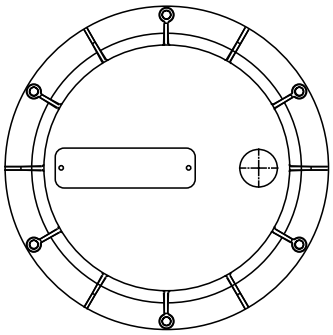

Nameplate with customer logo
Ordering information: **OB475LOGOP05**

The nameplates applied to the new inspection door are identical to those applied to the old door.
The difference with the new door is that nameplates are fixed with rivets.

For ordering information codes, minimum order quantities, fixing hole positions and other details not indicated in this publication, contact MP Filtri Technical and Sales Department.

Dimensions

Cleaning cover according to DIN 24339

OB275

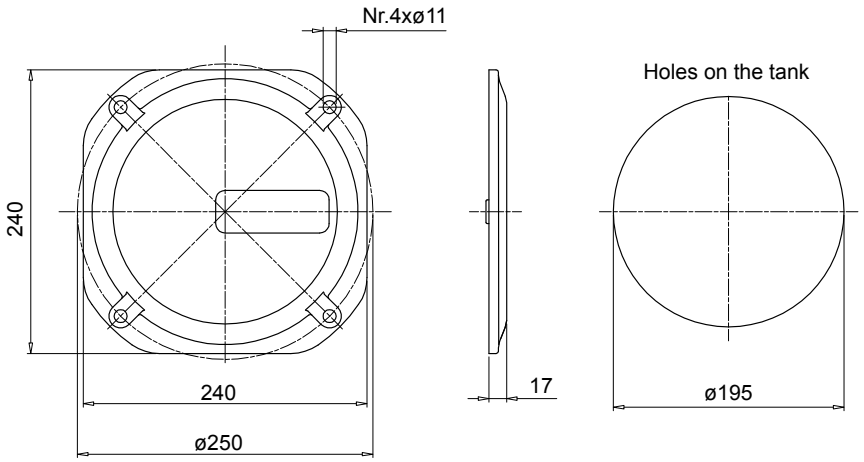

Code	Description	Seal
OB275P01GN	Door with MP Logo	NBR
OB275P02GN	Blank cover	NBR
OB275P01GV	Door with MP Logo	FPM
OB275P02GV	Blank cover	FPM

Code	Description
OB275P01	Door with MP Logo
OB275P02	Blank cover
GU0275NBR	Seal
GU0275VTN	Seal

OB400

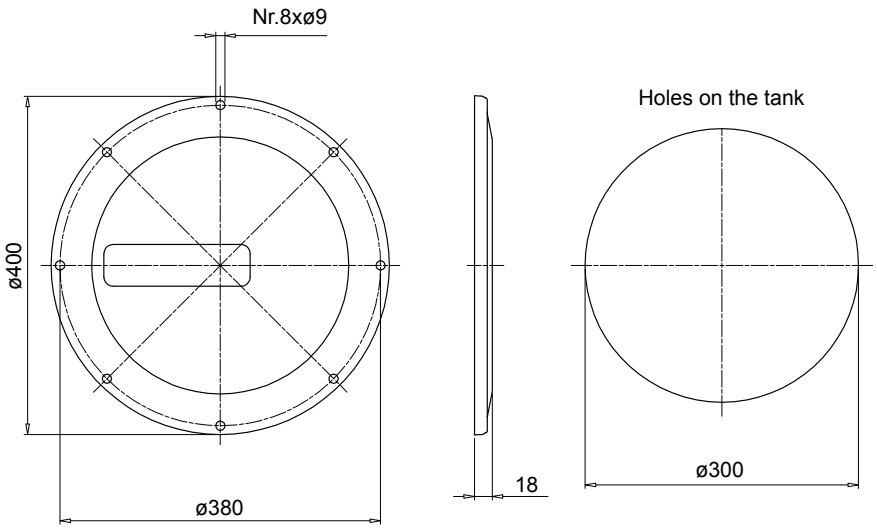

Code	Description	Seal
OB400P01GN	Door with MP Logo	NBR
OB400P02GN	Blank cover	NBR
OB400P01GV	Door with MP Logo	FPM
OB400P02GV	Blank cover	FPM

Code	Description
OB400P01	Door with MP Logo
OB400P02	Blank cover
GU0400DINNBR	Seal
GU0400DINVTN	Seal

Dimensions

OB350

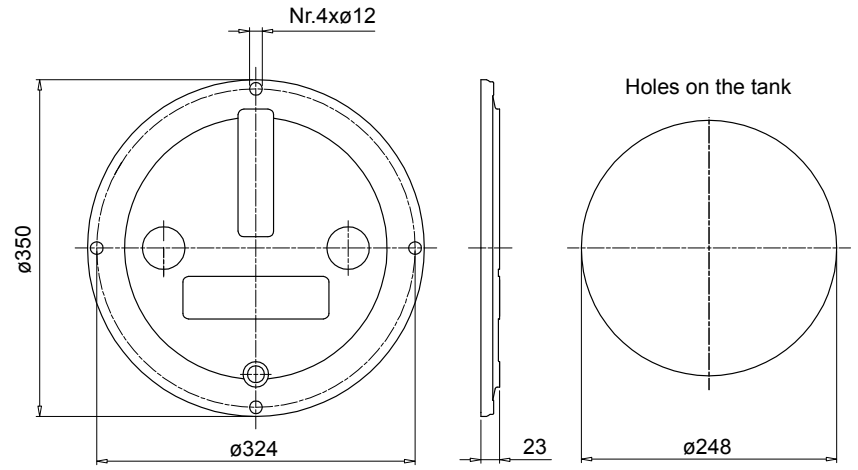

Code	Description	Seal
OB350P01GN	Door with MP Logo	NBR
OB350P02GN	Blank cover	NBR
OB350P01GV	Door with MP Logo	FPM
OB350P02GV	Blank cover	FPM

Code	Description
OB350DIN000	Door
GU0350DINNBR	Seal
GU0350DINVTN	Seal

OB356

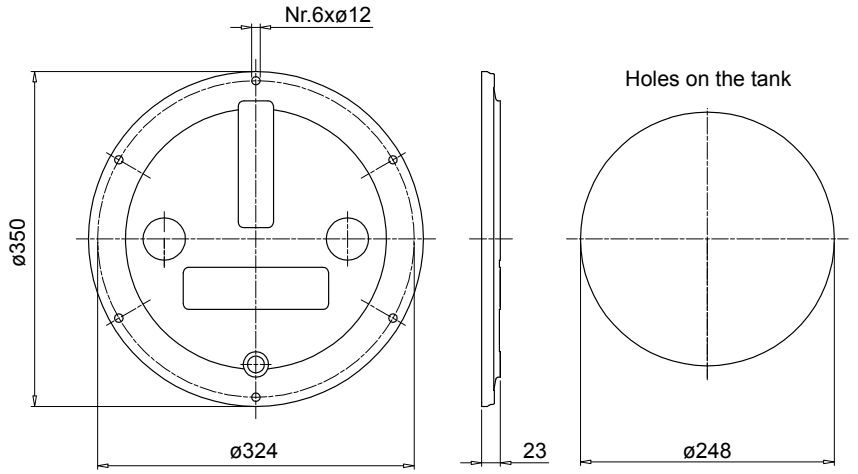

Code	Description	Seal
OB356P01GN	Door with MP Logo	NBR
OB356P02GN	Blank cover	NBR
OB356P01GV	Door with MP Logo	FPM
OB356P02GV	Blank cover	FPM

Code	Description
OB356DIN000	Door
GU0350DINNBR	Seal
GU0350DINVTN	Seal

OB475

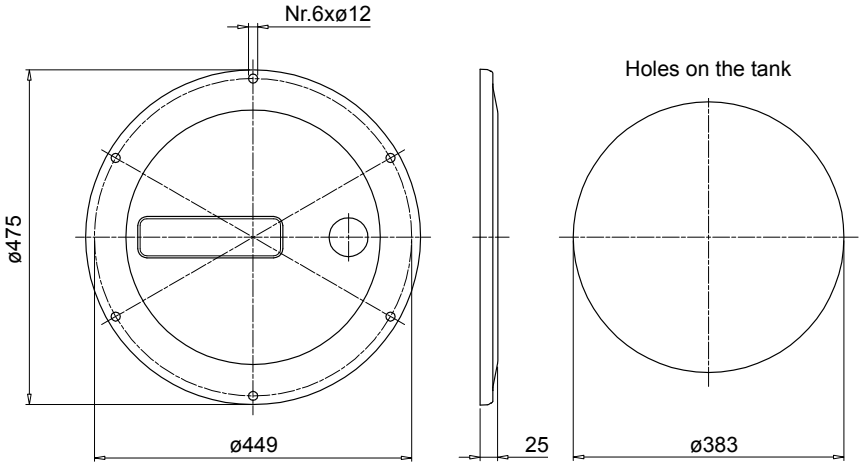

Code	Description	Seal
OB475P01GN	Door with MP Logo	NBR
OB475P02GN	Blank cover	NBR
OB475P01GV	Door with MP Logo	FPM
OB475P02GV	Blank cover	FPM

Code	Description
OB475P01	Door with MP Logo
OB475P02	Blank cover
GU0475DINNBR	Seal
GU0475DINVTN	Seal

LVA

LVA visual level indicators (see page 96) can also be mounted on MP Filtri cleaning covers to improve the maintenance and the service level.

Indicator code	OB275**	OB350**	OB356**	OB400**	OB475**
LVA 10**	•	•	•	•	•
LVA 20**		•	•	•	•
LVA 30**				•	•

Note:
Preparing for to fit the level on request

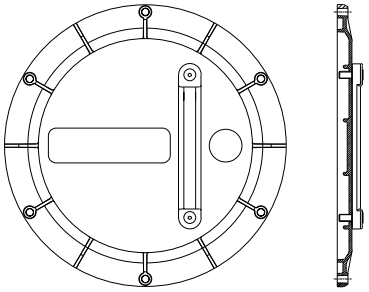

LCPG42N...S

LCP spy eyes (see page 90) can also be mounted on MP Filtri cleaning covers to improve the maintenance and the service level.

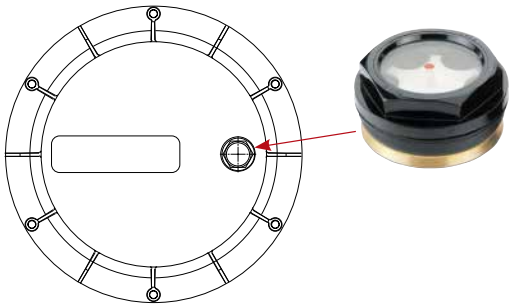

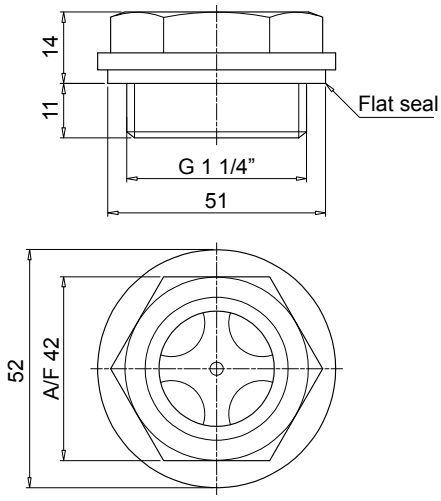

LEG

LEG series electrical level indicators (see page 106) are supplied with a 3-hole fixing flange and a reed switch having NC-NO contacts. Designed typically for installation on the vertical walls of oil tanks, these devices can also be mounted onto OB475 inspection door to indicate the minimum and maximum oil levels in the tank.
To operate correctly, the float must be positioned vertically and at a minimum distance of 35 mm from walls made of ferrous metal.

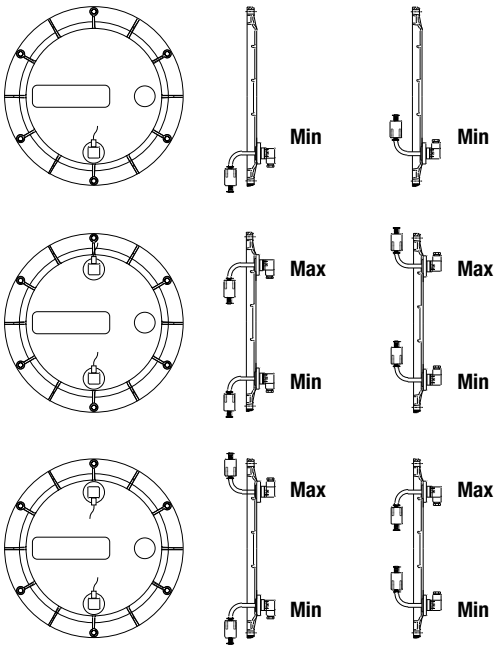

Note: Prepared for visual indicator on request

Layout of fixing holes for LEG level indicator

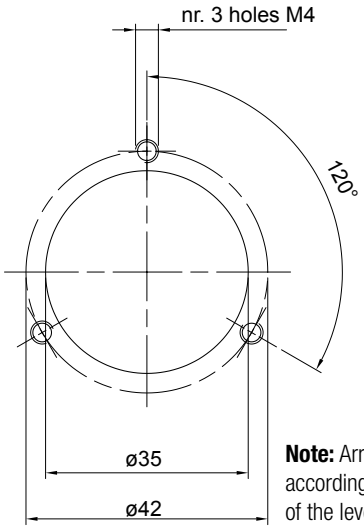

Note: Arrange the holes according to the position of the level indicator

SE10LT series

Aluminium tanks

SE10LT GENERAL INFORMATION

Technical data

Aluminium tanks

With 10 litres capacity, MP Filtri aluminium tank SE10LT allows the assembly of a compact hydraulic power unit.

Made of pressure die-cast aluminium alloy, these tanks feature superior strength and optimum design and are ideal for compact hydraulic power units.
Generously proportioned fins ensure efficient cooling.

The tank is supplied with:
- M6 threaded fixing holes for lid
- feet with M8 threaded fixing holes
- G 3/8" threaded drain hole

The lid is sealed by a gasket made of special paper, which must be ordered separately indicating code "GUS 10.0".

Material
Pressure die-cast aluminium alloy

Weight
SE10LT 4 kg

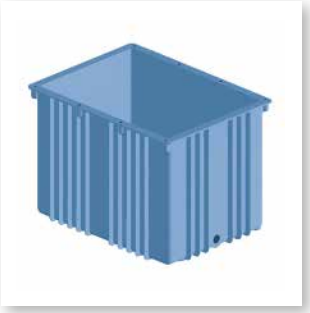

Designation & Ordering code

SE10LT

Size
SE10LT

SE10LT

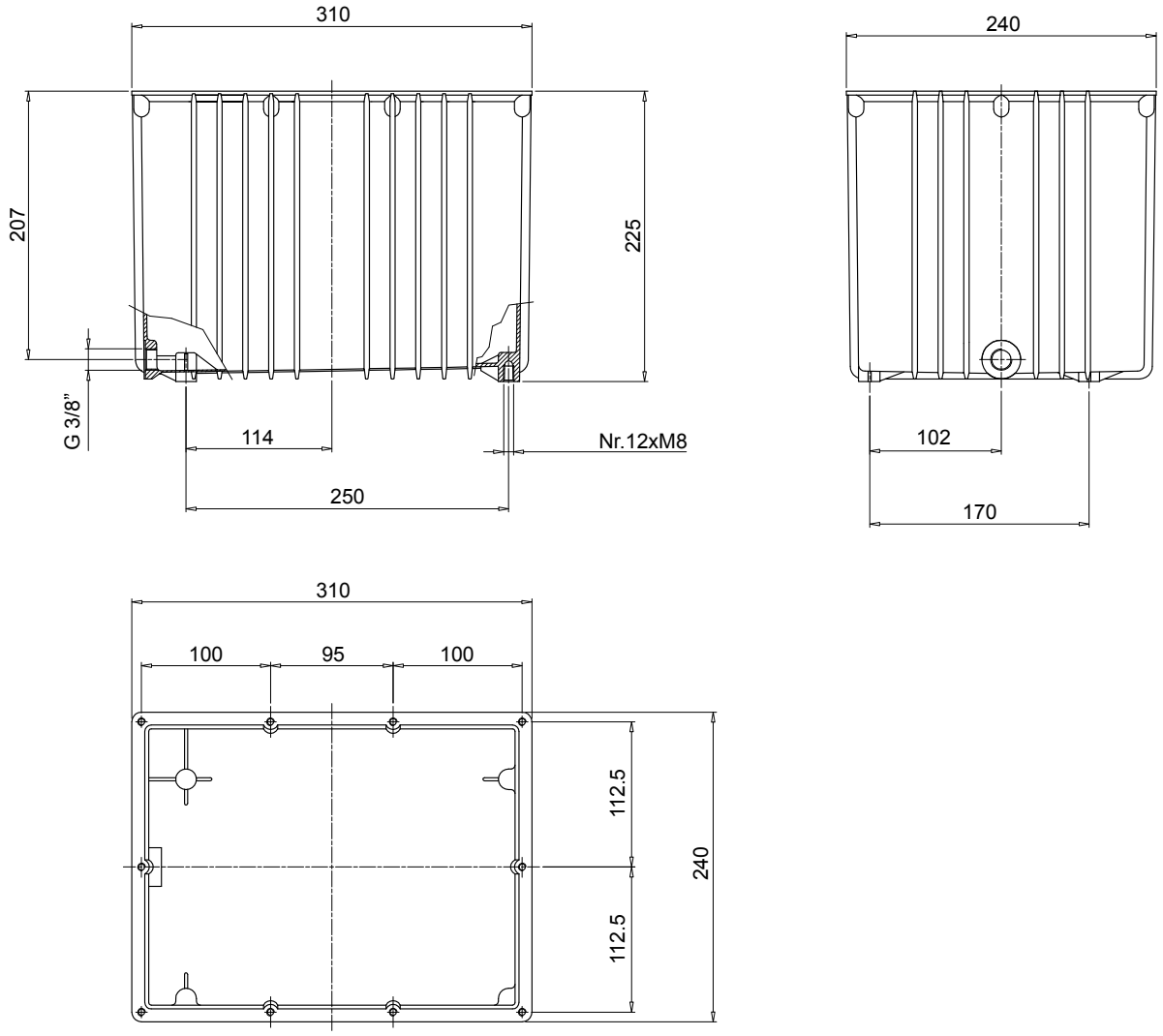
310
207
225
G 3/8"
114
Nr.12xM8
250
240
102
170
310
100
95
100
112.5
112.5
240

All data, details and words contained in this publication are provided for information purposes only.
MP Filtri reserves the right to make modifications to the models and versions of the described products at any time for both technical and / or commercial reasons.
The colors and the pictures of the products are purely indicative.
Any reproduction, partial or total, of this document is strictly forbidden.
All rights are strictly reserved.

WORLDWIDE NETWORK

HEADQUARTERS

MP Filtri S.p.A.
Pessano con Bornago
Milano
Italy
sales@mpfiltri.com

BRANCH OFFICES

ITALFILTRI LLC
Moscow
Russia
mpfiltrirussia@yahoo.com

MP Filtri Canada Inc.
Concord, Ontario
Canada
sales@mpfiltricanada.com

MP Filtri France SAS
Lyon
AURA
France
sales@mpfiltrifrance.com

MP Filtri Germany GmbH
St. Ingbert
Germany
sales@mpfiltri.de

MP Filtri India Pvt. Ltd.
Bangalore
India
sales@mpfiltri.co.in

MP Filtri (Shanghai) Co., Ltd.
Shanghai
P.R. China
sales@mpfiltrishanghai.com

MP Filtri U.K. Ltd.
Bourton on the Water
Gloucestershire
United Kingdom
sales@mpfiltri.co.uk

MP Filtri U.S.A. Inc.
Quakertown, PA
U.S.A.
sales@mpfiltriusa.com

PASSION TO PERFORM

mpfiltri.com

CMPEN001T
EN - Rev. 10-2021