HIGH PRESSURE FILTERS

INSTALLATION, SERVICE AND MAINTENANCE MANUAL AND SAFETY INSTRUCTIONS

FHB065

EN

PASSION TO PERFORM

MPFILTRI®

ENGLISH

TABLE OF CONTENTS

		Page
1.	**Description**	2
2.	**General warnings**	2
3.	**Tools**	2
4.	**Handling**	3
5.	**Dimensional drawings**	4
6.	**Installation**	5
7.	**Commissioning**	5
8.	**Standard maintenance**	6
8.1	Filter element replacement	6
9.	**Special maintenance**	7
9.1	Clogging indicator (or plug) replacement	7
9.2	Seals replacement	8
10.	**Instructions for use in explosive atmospheres**	10
11.	**Regulations**	10
12.	**Spare parts list**	11
13.	**Ordering code**	12
13.1	Filter / Housing / Bowl	12
13.2	Filter element	13
14.	**Troubleshooting**	14
14.1	Misuse of the product	14
14.2	Clogging indicator alarm	14
14.3	Leaks of working fluid	14

Please scan the QR codes to get updated electronic version of the related document.

Scan or click me!

1. Description

The hydraulic filters are components used to remove the contaminants from the hydraulic fluids used in the hydraulic systems, maximum pressure up to 320 bar, flow rate up to 135 l/min.

2. General warnings

- Before the installation, use or maintenance of the filter carefully read the manual
- The system and the filter are pressurised! Be sure the system is at ambient pressure before starting any activity
- The fluid temperature inside the system and the filter can cause injuries to personnel or create a hazardous environment
- Any activity must be carried out by trained and certified specialists, they must use the correct protective equipment
- Any activity must be carried out using the correct tool
- Any activity must be carried out in accordance with the laws in force in the country where the system is in operation
- The data shown onto the nameplate must be complete and legible during the whole filter working life
- Connect the filter with an anti-loosening system and regularly check the condition of the connection
- The declared performances and the safety of the product are only guaranteed when MP Filtri original spare parts are used
- Warranty is only effective if MP Filtri original spare parts are used.

3. Tools

FHB065	TOOL	TIGHTENING TORQUE
Differential indicator	Wrench A/F 27/30/32	60 N·m
Bypass plug	Wrench A/F 30	60 N·m
Bowl	Wrench A/F 30	60 N·m
Fastening screws M10	Allen key A/F 8	46 N·m
Fastening screws 3/8-16 UNC	Allen key A/F 5/16”	40 N·m

4. Handling

- The unit is shipped in a cardboard box with dimensions depending on the order
- The handling must be carried out in accordance with the laws in force in the country of use of the product
- Handle the product with care, avoid impacts
- Store in a dry and frost-free room
- The unit should be stored in a suitable location away from the production area when not in use.
  The unit should be stored with the caps provided on the ports and the bowl's protective net, if present.
  This location should not impede any other production or personnel

Please refer to the following Weight table:

SERIES AND SIZE	WEIGHTS [kg]			
	Length	1	2	3
FHB065		3.33	3.69	4.90

5. Dimensional drawings

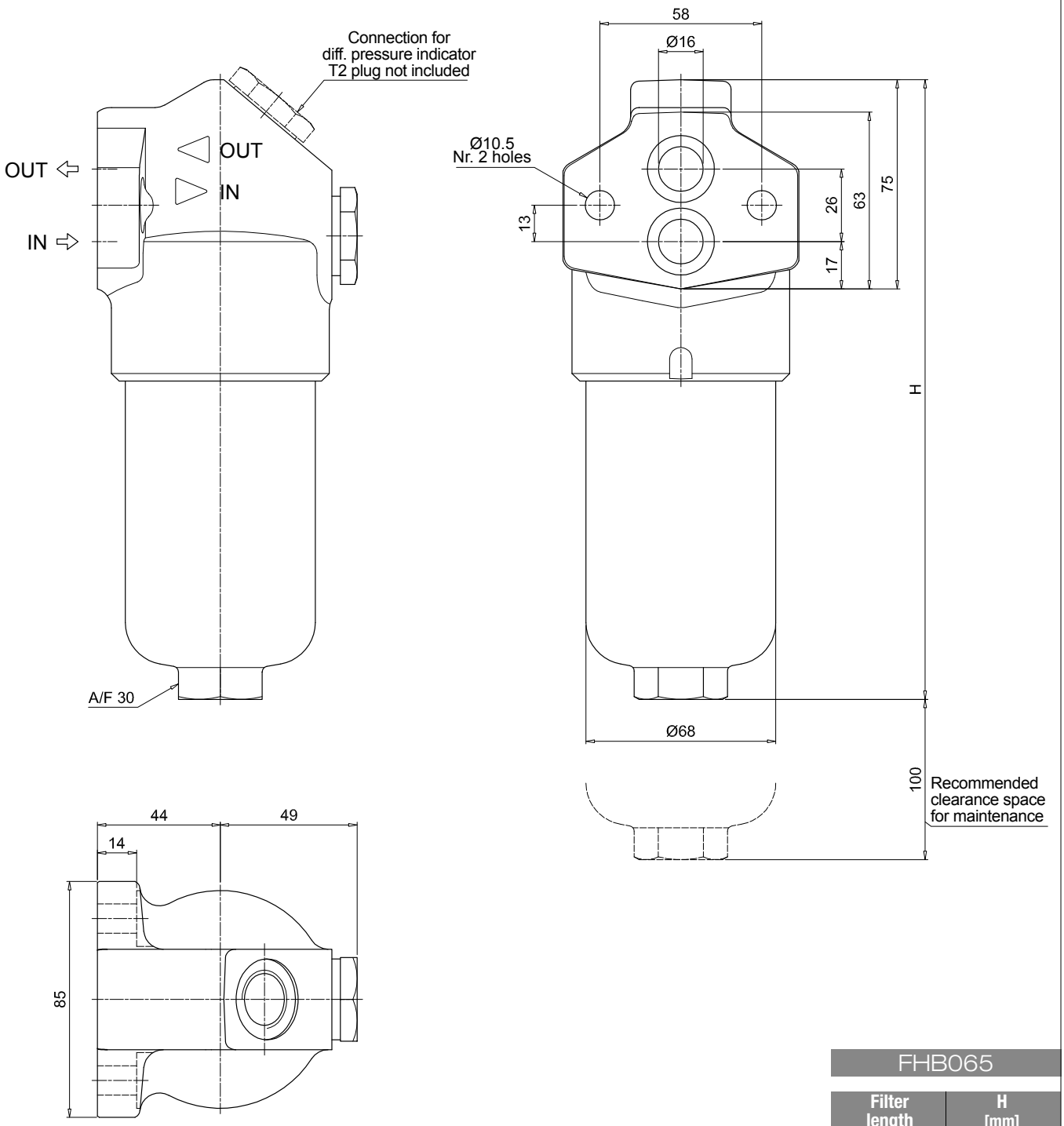

FHB065	
Filter length	**H [mm]**
1	196
2	227
3	329

6. Installation

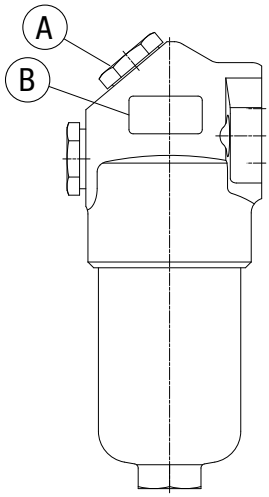

(A) Clogging indicator connection

(B) Identification plate

- Check that the system working pressure does not exceed the maximum working pressure of the filter.
  The maximum working pressure of the filter is shown on the identification plate
- Check that the filter is compatible with the fluid used in the system
- Remove the plastic plugs from the inlet, the outlet and the indicator connection
- Check that the correct filter elements are fitted into the filter
- Check the flow direction (the flow is indicated by two arrows on the filter body)
- Install the clogging indicator, if required.
  In the case of using an electrical clogging indicator, follow the electrical diagram for correct installation
- Fasten the filter to the bracket with the correct bolts. Be sure to fit the filter without any tension stress
- Check that there is appropriate clearance for maintenance and the filter elements replacement.
  Correct operation is only guaranteed if the filter is installed in a vertical orientation with the filter housing at the top
- Check for a good view of the clogging indicator
- Connect the filter to the hydraulic system, using the appropriate hydraulic fittings.

7. Commissioning

- Switch on the hydraulic system
- Check the filter is free of leaks
- Check the filter for leaks at the maximum working conditions (pressure, temperature …)
- Check the filter does not cause excessive pressure drop checking that the indicator does not show the alarm signal.

8. Standard maintenance

8.1 FILTER ELEMENT REPLACEMENT

The clogging indicator monitors the conditions of the filter element. The alarm signal shown by the differential indicator during the normal working conditions (pressure, temperatures …) means that the filter element needs to be replaced.

- Check the availability of the right spare filter element by comparing the part number shown on the element with that shown on the filter name plate or spare parts list
- For the disassembly and the assembly of the parts, please refer to the tools table in paragraph 3
- Switch off the system
- (Fig. 1) Unscrew the filter bowl after placing a vessel to collect the operating fluid
- (Fig. 2) Empty the operating fluid from the bowl into the collection vessel
- (Fig. 3) Pull the filter element out
- Clean the cavity in the housing, the tap and the bowl. Check them for damage.
- Check the condition of the bowl seals and, if necessary, replace them referring to the “Special maintenance” paragraph.
- (Fig. 4) Lubricate with the operating fluid the filter element O-ring, the housing tap and cavity, then fit the filter element on the tap. Pay attention not to damage the O-ring seal.
- (Fig. 5) Lubricate the thread and the O-ring of the bowl, then screw the bowl in referring to the tightening torque table in paragraph 3.
- Switch on the system and check the filter for leaks at the maximum working conditions (pressure, temperature…)
- Dispose of the replaced parts and the collected fluid in accordance with the laws in force in the country of use of the product.

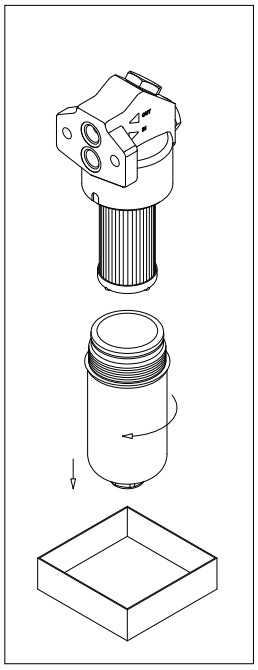
fig. 1

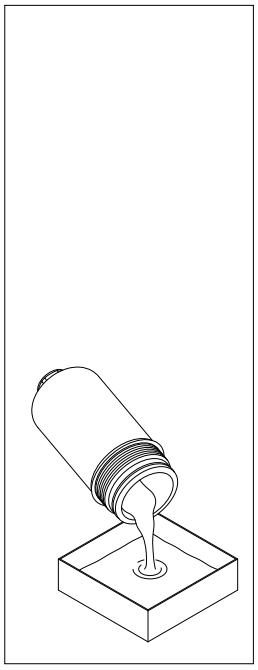
fig. 2

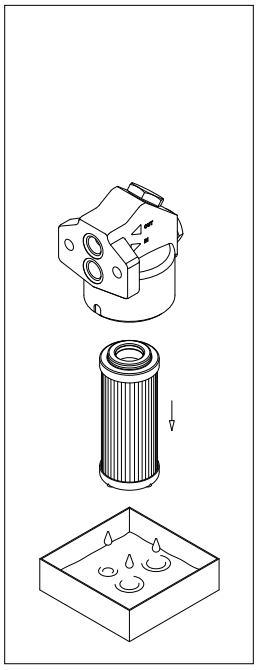
fig. 3

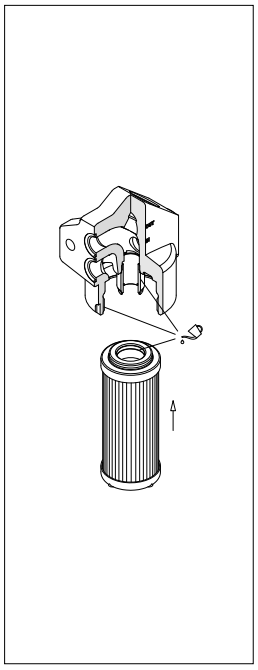
fig. 4

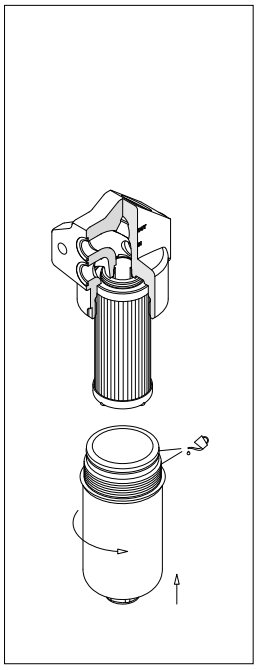
fig. 5

9. Special maintenance

9.1 CLOGGING INDICATOR (OR PLUG) REPLACEMENT

- Check the availability of the right spare parts by comparing the part numbers shown on them with that shown on the filter name plate or spare parts list
- For the disassembly and the assembly of the parts, please refer to the tools table in paragraph 3
- Switch off the system
- (Fig. 6) Remove the connector of the differential indicator by unfastening the central screw (only for electrical indicators)
- (Fig. 7) Unscrew the indicator body
- (Fig. 8) Lubricate with the operating fluid the thread and the O-ring of the indicator body, then screw the indicator body in referring to the tightening torque table in paragraph 3
- (Fig. 9 Insert the connector by fastening the central screw (only for electrical indicators)
- Switch on the system and check the filter for leaks at the maximum working conditions (pressure, temperature…)
- Dispose of the replaced parts in accordance with the laws in force in the country of use of the product.

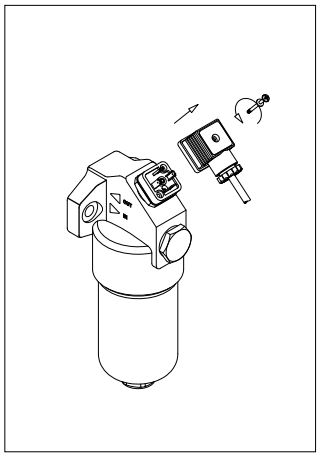

fig. 6

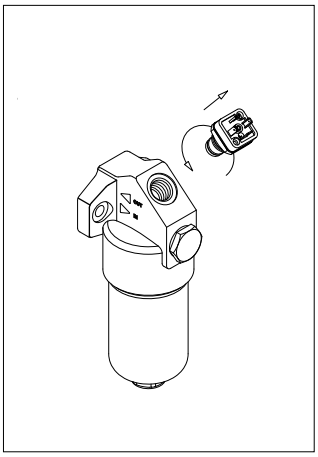

fig. 7

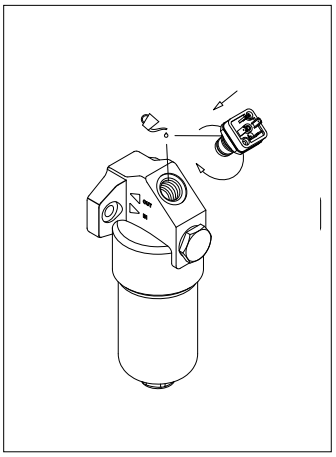

fig. 8

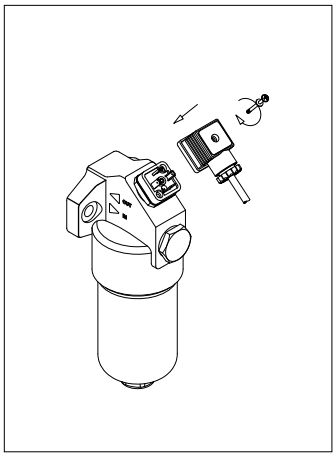

fig. 9

9.2 SEALS REPLACEMENT

- Check the availability of the right spare parts by comparing the part numbers shown on them with that shown on the filter name plate or spare parts list
- For the disassembly and the assembly of the parts, please refer to the tools table in paragraph 3
- Switch off the system
- (Fig. 10) Unscrew the filter bowl after placing a vessel to collect the operating fluid
- (Fig. 11) Empty the operating fluid from the bowl into the collection vessel
- (Fig. 12) Pull the filter element out
- Remove all the seal from the bowl and the filter element and prepare the spare parts referring to the list in paragraph 12
- Clean the cavity in the housing, the tap and the bowl. Check them for damage
- (Fig. 13) Fit #1: the anti-extrusion ring and #2: the O-ring in the bowl groove, insert the O-ring in the filter element cap
- (Fig. 14) Lubricate with the operating fluid the filter element O-ring, the housing tap and cavity, then fit the filter element on the tap. Pay attention not to damage the O-ring seal
- (Fig.15) Lubricate the thread and the O-ring of the bowl, then screw the bowl in referring to the tightening torque table in paragraph 3

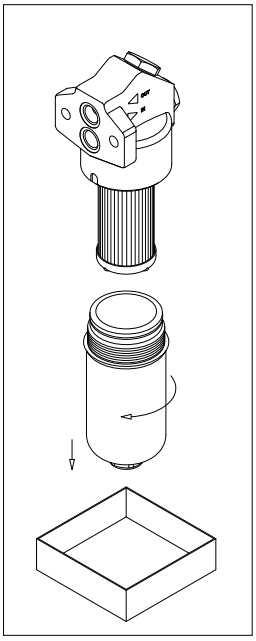

fig. 10

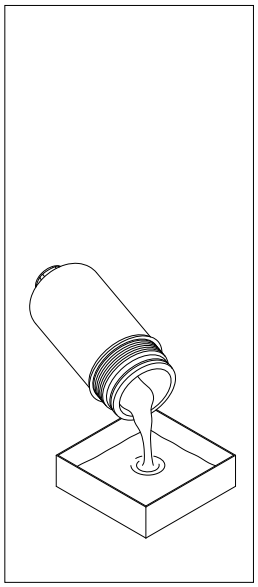

fig. 11

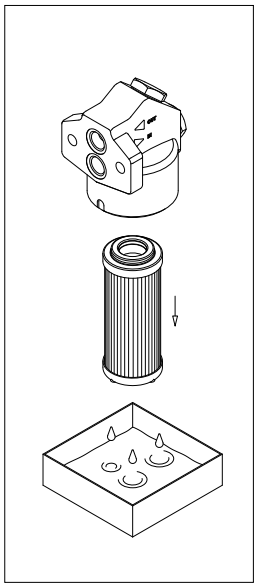

fig. 12

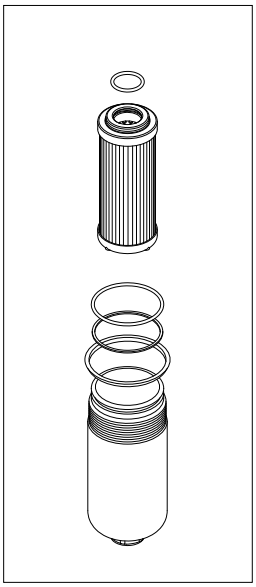

fig. 13

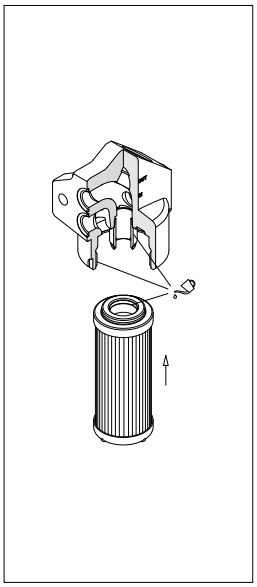

fig. 14

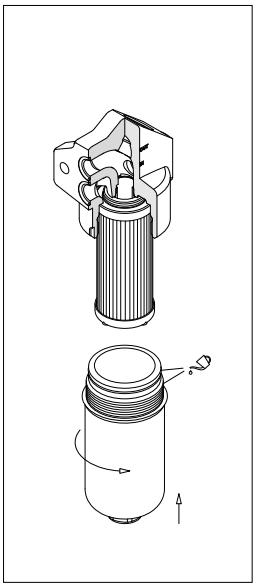

fig. 15

FHB065

- (Fig. 16) Replace the O-rings of the indicator body
- For the mounting/dismounting of the indicator, please refer to the paragraph “Clogging indicator replacement” above (Fig. 6÷9)
- (Fig. 17) Replace the O-rings of the bypass
- (Fig. 18) Replace the O-rings of the mainfold
- Switch on the system and check the filter for leaks at the maximum working conditions (pressure, temperature…)
- Dispose of the replaced parts and the collected fluid in accordance with the laws in force in the country of use of the product.

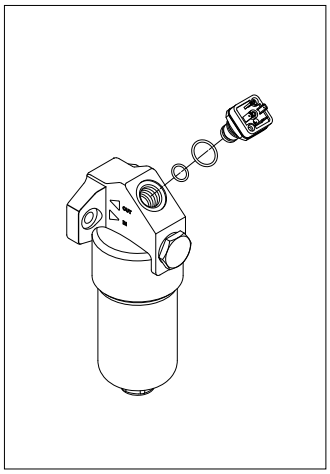

fig. 16

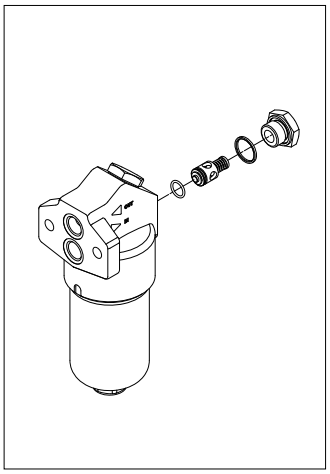

fig. 17

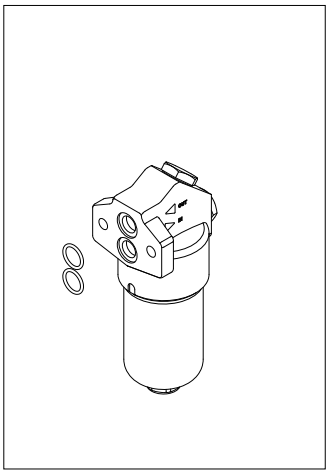

fig. 18

10. Instructions for use in explosive atmospheres

Hydraulic filters should be installed in applications in which special safety measures are required to prevent the triggering of explosive atmospheres, such as use in environments classified according to directive 1999/92/CE (ATEX) or the use of flammable fluids.

Conditions like the use of low conductivity fluids, which could cause electrostatic discharges, or installation near hot components, which could cause surfaces heating, could alter the safety of the filters.

MP FILTRI has carried out a voluntary certification of a part of the product range in compliance with directive 2014/34/EU, in order to guarantee an appropriate degree of safety in these particular conditions.

The content of the certification and the relative marking make them suitable for use in environments classified in accordance with directive 1999/92/CE (ATEX - ZONE 2).

11. Regulations

Hydraulic filters are not machines, but simple components.
Hydraulic filters are excluded from the scope of the Machinery Directive 2006/42/EC, they don't need the CE mark.
Hydraulic filters are designed to be fitted within a hydraulic system designed in accordance with the Machinery Directive 2006/42/EC.

Hydraulic filters are pressurized components. The maximum working pressure PS is over 0.5 bar, so they are subject to the Directive 2014/68/EU (PED)
FHB filters are designed and manufactured for fluids included into the Group 2 defined by the Directive 2014/68/EU.
FHB filters do not need the CE marking in accordance with the Directive 2014/68/UE Article 4, Section 3.

FHB filters do not contain any substance of very high concern (SVHC) in percentage higher than 0.1% in accordance with the Regulation (EC) No 1907/2006 (REACH)

FHB filters are designed and manufactured in accordance with the Commission Delegated Directive (EU) 2015/863 (RoHS).

12. Spare parts list

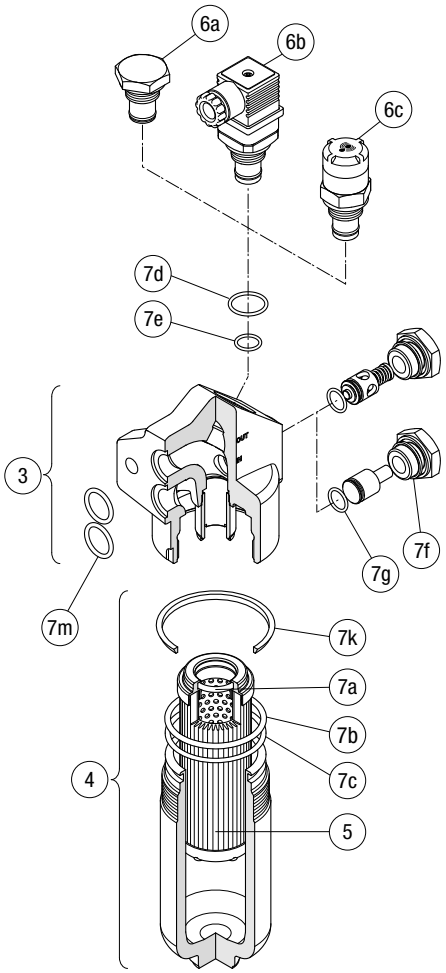

Item	Quantity	Description	Designation / Ordering code		
1	1	**Complete filter**	See “Ordering Code” table		
3	1	**Housing**			
4	1	**Bowl assembly**			
5	1	**Filter element**			
6	1	**Clogging indicator**			
7	1	**Seals kit**	NBR	FPM	EPDM
			02050266	02050277	02050203
7a	1	Filter element seal	O-Ring 4100 - di = 24.99 - d_2 = 3.53		
7b	1	Bowl seal	O-Ring 159 - di = 55.56 - d_2 = 3.53		
7c	1	Bowl anti-extrusion ring	SR227		
7d	1	Indicator seal	ORM 0210-20 - di = 21.00 - d_2 = 2.00		
7e	1	Indicator seal	O-Ring 2050 - di = 12.42 - d_2 = 1.78		
7f	1	Bypass plug seal	Self-centering bonded seal G 1/2		
7g	1	Bypass seal	O-Ring 2050 - di = 12.42 - d_2 = 1.78		
7k	1	Head seal	Private dimensions		
7m	2	Manifold seal	O-Ring 3075 - di = 18.72 - d_2 = 2.62		

13. Ordering code

13.1 FILTER / HOUSING / BOWL

FILTER / HOUSING / BOWL

Filter:	FHB065	1	T	A	F1	M25	H	P01
Housing:	FHB065		T	A	F1			P01
Bowl:	HPB065	1		A		M25	H	P01

Filter Series and size

FHB065	Filter / housing
HPB065	Bowl assembly

Filter length

1	**2**	**3**

Valves

S	Without bypass
B	With bypass 6 bar
T	With check valve, without bypass
D	With check valve, with bypass 6 bar

Seals

A	NBR
V	FPM
E	EPDM

Connections

F1	Manifold

Filtration rating (filter media)

A03	Inorganic microfiber	3 µm
A06	Inorganic microfiber	6 µm
A10	Inorganic microfiber	10 µm
A16	Inorganic microfiber	16 µm
A25	Inorganic microfiber	25 µm
M25	Wire mesh	25 µm

		Valves			
Element Δp		**S**	**B**	**T**	**D**
N	20 bar	-	•	-	•
H	210 bar	•	-	•	-

Execution

P01	MP Filtri standard
Pxx	Customized

FHB065

13.2 FILTER ELEMENT

FILTER ELEMENT

Configuration example: HP065 | 1 | A06 | A | H | P01

Element series and size

HP065

Element length

1	2	3

Filtration rating (filter media)

A03	Inorganic microfiber	3 µm
A06	Inorganic microfiber	6 µm
A10	Inorganic microfiber	10 µm
A16	Inorganic microfiber	16 µm
A25	Inorganic microfiber	25 µm
M25	Wire mesh	25 µm

Seals

A	NBR
V	FPM
E	EPDM

Element Δp

N	20 bar
H	210 bar

Execution

P01	MP Filtri standard
Pxx	Customized

CLOGGING INDICATORS

DEA	Electrical differential indicator
DEM	Electrical differential indicator
DLA	Electrical / visual differential indicator
DLE	Electrical / visual differential indicator
DTA	Electrical differential indicator
DVA	Visual differential indicator
DVM	Visual differential indicator
T2	Plug

14. Troubleshooting

14.1 MISUSE OF THE PRODUCT

This product should be connected to a hydraulic line; this must not exceed upper pressure limit of the product.
his product should follow all standard operating procedures previously set at the operating location as well as the procedures required by the manufacturer.
Over-tighten of test points/hoses can damage threads causing the unit to fail.
The product is designed with no components in motion.

14.2 CLOGGING INDICATOR ALARM

In normal functioning of the system, the clogging of the filter by contaminants will result in a gradual increase in the pressure drop through the filter.
The filter element should be replaced before it is completely clogged and anyways before the pressure exceeds the setting value of the bypass valve. For this reason, we recommended using a clogging indicator (visual or electrical), that advises the appropriate timing for replacing the cartridge.
Should the clogging indicator be in alarm mode, it means that the pressure has already exceeded the guard threshold, and the cartridge has to be replaced.

14.3 LEAKS OF WORKING FLUID

Leaks from the connections with normal tightening may indicate seal damage during the warehousing process, fluid incompatibility, or unsuitable work conditions.

NOTES

NOTES

All data, details and words contained in this publication are provided for use by technically qualified personnel at their discretion, without warranty of any kind.
MP Filtri reserves the right to make modifications to the models and versions of the described products at any time for both technical and/or commercial reasons.
For updated information please visit our website: *www.mpfiltri.com*
The colors and the pictures of the products are purely indicative.
Any reproduction, partial or total, of this document is strictly forbidden.
All rights are strictly reserved

WORLDWIDE NETWORK

CANADA • CHINA • FRANCE • GERMANY • INDIA • SINGAPORE
UNITED ARAB EMIRATES • UNITED KINGDOM • USA

MPFILTRI®

PASSION TO PERFORM

mpfiltri.com
Scan or click me!

MF010000185
EN - 2025.04