Power Transmission
Product Range

PASSION TO PERFORM

MPFILTRI®
POWER TRANSMISSION

LMG

One-piece bell-housing, especially suitable for gear pumps and small piston pumps.

LDC

Consist of two mounted parts with screws for motor and pumps.

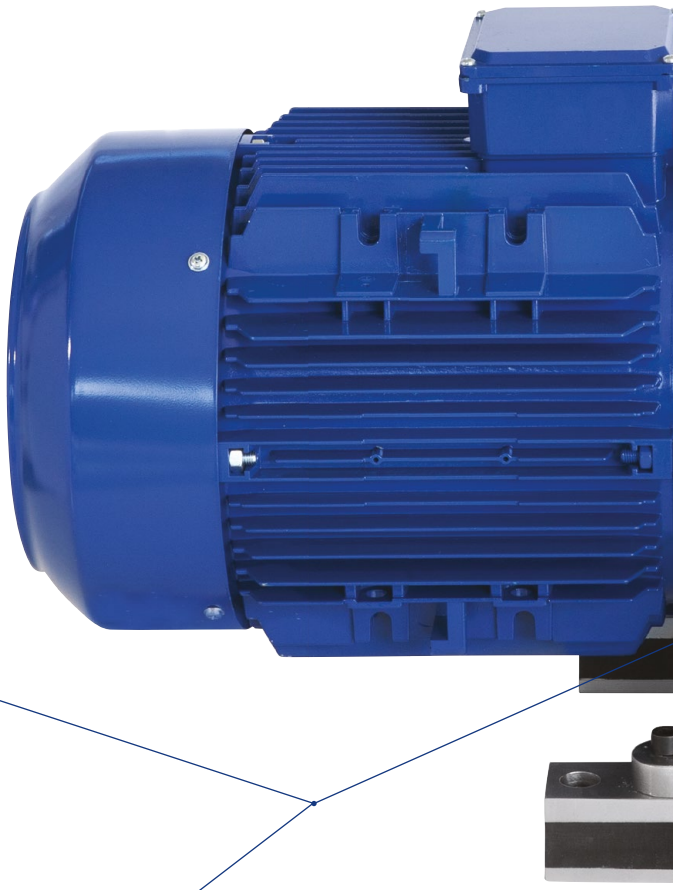

LMS

Featuring optagonal damping ring to reduce the noise generated by vibration between pumps and motors.

MULTI-COMPONENTS

Modular systems for large pumps.
Comprised of a motor flange, an adaptor and a pump flange, the system is highly flexible offering multiple assembly combinations.

SGEA-SGEG-SGES-SGEK-SGDR

Flexible couplings for IEC electric motors and hydraulic pumps:
- SGEA Series in Aluminum
- SGEG Series in Cast Iron
- SGES Series in Steel
- SGEK Series in Aluminum
- SGEK Series in Cast Iron
- SGDR Series in Steel

ROTAFIT

AKG

Complete couplings for hydraulic pumps and IEC electric motors:
- AKG Series in Aluminum
- AKG Series in Cast Iron
- AKG Series in Steel

ATEX 2014/34/UE & U.K. Regulation
S.I. 2016 No. 1107 (as amended)

EGE

Spider for torque transmission:
- EGE Series in NBR
- EGE RR Series in Polyurethane

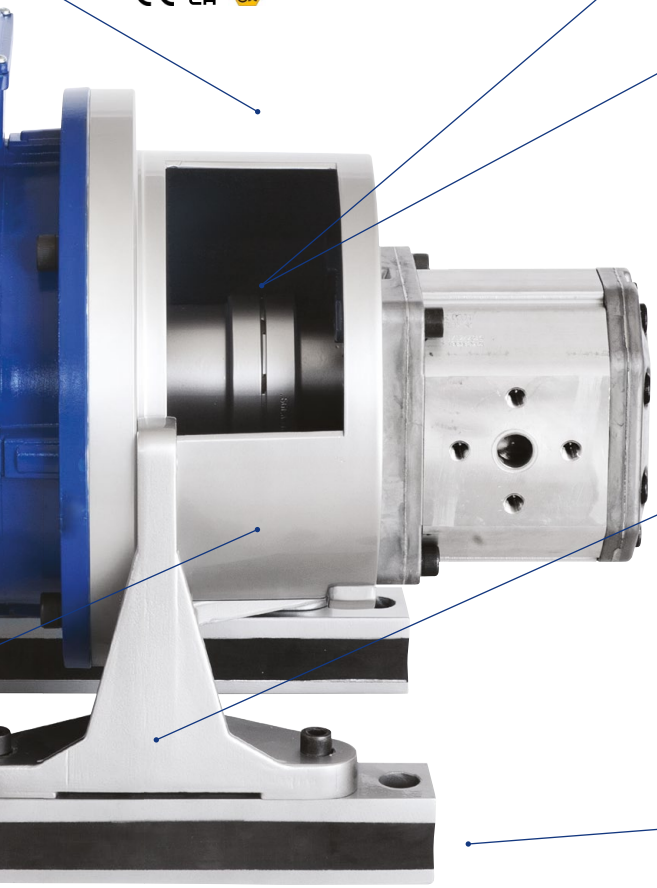

ACCESSORIES

PDMA

Mounting foots to support the motor-pump units, assembled on bell-housings.

MPDR

Damping rods, mounting rails with NBR insert, suitable to reduce the vibrations.

CLEANING COVERS

Cleaning covers with diameter 275, 350, 400 and 475 mm conforming to DIN 24339.

ANMA

Damping rings for vertical installation of the motor-pump units.

BELL-HOUSING

For gear, piston, vane and screw pumps.

IEC Electric Motors	Gear pumps								
	European std						German std - Bosch		
	0,5	1	2	3	3,5	4	ZB	ZF	ZG
IEC 63 Ø140 - d.11x23	•	•	•				•		
IEC 71 Ø160 - d.14x30	•	•	•				•		
IEC 80 Ø200 - d.19x40	•	•	•	•			•	•	
IEC 90 Ø200 - d.24x50	•	•	•	•			•	•	
IEC 100 Ø250 - d.28x60		•	•	•	•		•	•	
IEC 112 Ø250 - d.28x60		•	•	•	•		•	•	
IEC 132 Ø300 - d.38x80		•	•	•	•	•		•	•
IEC 160 Ø350 - d.42x110			•	•	•	•	•	•	•
IEC 180 Ø350 - d.48x110			•	•	•	•	•	•	•
IEC 200 Ø400 - d.55x110			•	•	•	•	•	•	•
IEC 225 Ø450 - d.60x140			•	•	•	•	•	•	•

IEC Electric Motors	Flange ISO 3019-2							Flange SAE J 744										
	50 B2/B4	63 B2/B4	80 B2/B4	100 B2/B4	125 B2/B4	160 B2/B4	200 B2/B4	50-2 (A-A)	82-2 (A)	101-2 (B)	127-2 (C)	152-2 (D)	165-2 (E)	101-4 (B)	127-4 (C)	152-4 (D)	165-4 (E)
IEC 80 Ø200 - d.19x40	•	•	•	•				•	•								
IEC 90 Ø200 - d.24x50	•	•	•	•				•	•								
IEC 100 Ø250 - d.28x60	•	•	•	•	•			•	•	•				•			
IEC 112 Ø250 - d.28x60	•	•	•	•	•			•	•	•	•			•			
IEC 132 Ø300 - d.38x80			•	•	•	•			•	•	•			•	•		
IEC 160 Ø350 - d.42x110			•	•	•	•			•	•	•			•	•		
IEC 180 Ø350 - d.48x110			•	•	•	•	•		•	•	•			•	•		
IEC 200 Ø400 - d.55x110			•	•	•	•	•		•	•	•	•		•	•	•	
IEC 225 Ø450 - d.60x140			•	•	•	•	•			•	•	•	•	•	•	•	•
IEC 250 Ø550 - d.65x140			•	•	•	•	•				•	•	•		•	•	•
IEC 280 Ø550 - d.75x140					•	•	•				•	•	•		•	•	•
IEC 315 Ø660 - d.80x170					•	•	•				•	•	•		•	•	•
IEC 355 Ø800 - d.90x170					•	•	•				•	•	•		•	•	•

COUPLINGS

- 100% shaft covering
- Noise reduction by spider inclusion
- Spider available with different material

IEC Electric Motors	Aluminium ENAB 46100	G25 UNI 5007 Cast Iron - C40 Carbon Steel				
	Shaft ISO 3019-2	Shaft ISO 3019-2	Shaft ANSI B92.1A1976	Shaft DIN 5480	Shaft DIN 5481	Shaft DIN 5482
IEC 80 Ø200 - d.19x40	•	•	•	•	•	•
IEC 90 Ø200 - d.24x50	•	•	•	•	•	•
IEC 100 Ø250 - d.28x60	•	•	•	•	•	•
IEC 112 Ø250 - d.28x60	•	•	•	•	•	•
IEC 132 Ø300 - d.38x80	•	•	•	•	•	•
IEC 160 Ø350 - d.42x110	•	•	•	•	•	•
IEC 180 Ø350 - d.48x110	•	•	•	•	•	•
IEC 200 Ø400 - d.55x110	•	•	•	•	•	•
IEC 225 Ø450 - d.60x140		•	•	•	•	•
IEC 250 Ø550 - d.65x140		•	•	•	•	•
IEC 280 Ø550 - d.75x140		•	•	•	•	•
IEC 315 Ø660 - d.80x170		•	•	•	•	•
IEC 355 Ø800 - d.90x170		•	•	•	•	•

EASY TO MASTER SOFTWARE

Our simple to use yet sophisticated software system takes you step-by-step through the selection process making it easy for you to find the ideal coupling for your needs.

STEP 1

Go to our software selection site portal at:
https://www.mpfiltri.com/registration.html

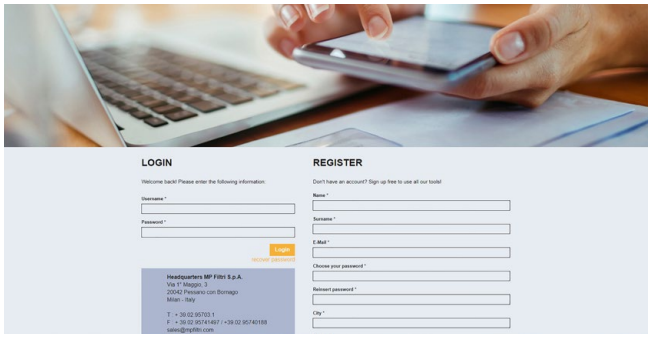

STEP 2

Log in and select Power Transmission Software.

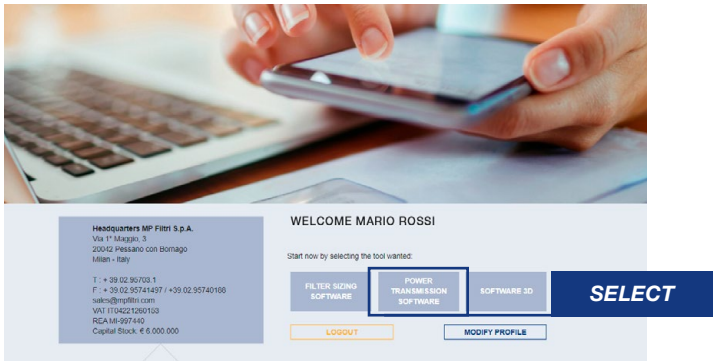

STEP 3

Select your pump and motor.

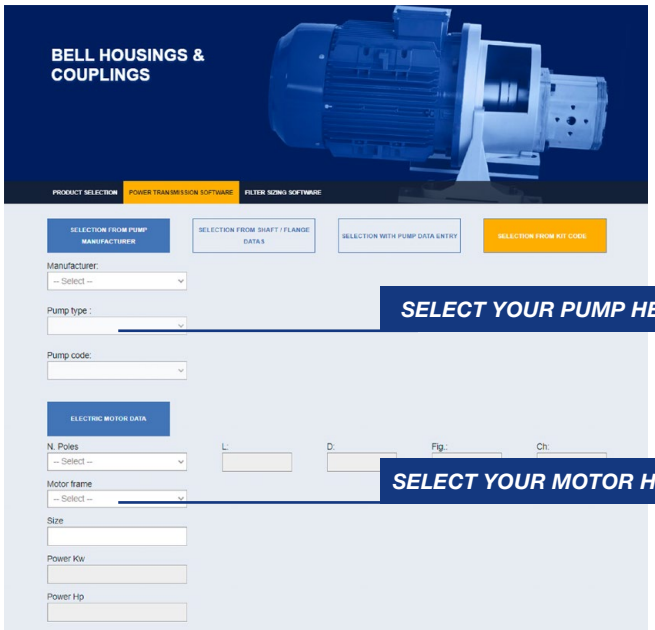

STEP 4

Confirm your specification and receive the coupling datasheet complete with dimensional 2D drawing.

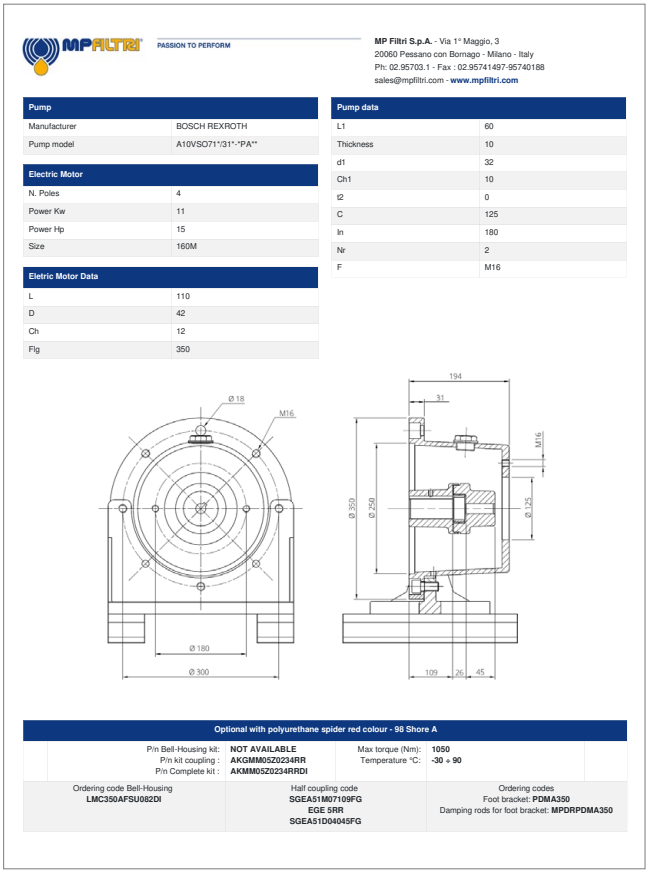

MP FILTRI PASSION TO PERFORM

MP Filtri S.p.A. - Via 1° Maggio, 3
20060 Pessano con Bornago - Milano - Italy
Ph: 02.95703.1 - Fax : 02.95741497-95740188
sales@mpfiltri.com - www.mpfiltri.com

Pump	
Manufacturer	BOSCH REXROTH
Pump model	A10VSO71*/31*-*PA**

Electric Motor	
N. Poles	4
Power Kw	11
Power Hp	15
Size	160M

Eletric Motor Data	
L	110
D	42
Ch	12
Flg	350

Pump data	
L1	60
Thickness	10
d1	32
Ch1	10
t2	0
C	125
In	180
Nr	2
F	M16

Optional with polyurethane spider red colour - 98 Shore A		
P/n Bell-Housing kit: NOT AVAILABLE P/n kit coupling : AKGMM05Z0234RR P/n Complete kit : AKMM05Z0234RRDI	Max torque (Nm): 1050 Temperature °C: -30 ÷ 90	
Ordering code Bell-Housing LMC350AFSU082DI	Half coupling code SGEA51M07109FG EGE 5RR SGEA51D04045FG	Ordering codes Foot bracket: PDMA350 Damping rods for foot bracket: MPDRPDMA350

NEW FEATURE

YOU CAN'T FIND THE PUMP ON THE SYSTEM?

Insert pump's dimension on the section

SELECTION WITH PUMP DATA ENTRY

and follow the instructions to achieve the couplings components code.

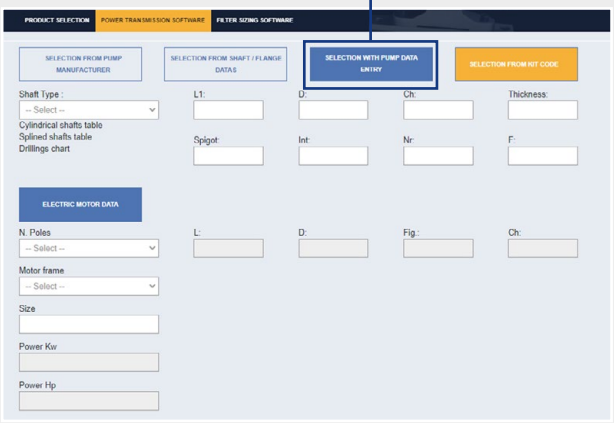

WORLDWIDE NETWORK

HEADQUARTERS

10 BRANCHES

OVER 100 DISTRIBUTORS

Germany
France
USA
Russian
China Federation
United Kingdom
India
Canada
Singapore
United Arab Emirates

PASSION TO PERFORM

CMP3AUS002X
04/2022